YANMAR

PARTS CATALOG

0CB50-M00580EN

Last update Aug., 2021

PREFACE

This parts catalog is the 1st edition of 3TNV86CT-MASV, 3TN86CHT-MASV for ASV.

Published : August, 2021

Contents

0CB50-M00580

Fig. No. Fig. Name

3TNV86CT-MASV

1. CYLINDER BLOCK
2. GEAR HOUSING
3. FLYWHEEL HOUSING & OIL SUMP
4. CYLINDER HEAD & BONNET
5. SUCTION MANIFOLD
6. EXHAUST MANIFOLD
7. DIESEL PARTICULATE FILTER(DPF)
8. CAMSHAFT & DRIVING GEAR
9. TURBINE
10. CRANKSHAFT & PISTON
11. LUB. OIL SYSTEM
12. LUB. OIL PIPE
13. COOLING WATER SYSTEM
14. FUEL SUPPLY PUMP
15. FUEL INJECTION VALVE
16. FUEL PIPE
17. STARTER MOTOR
18. GENERATOR
19. ELECTRONIC CONTROL UNIT(ECU)
20. ELECTRIC PARTS
21. ACCESSORY

3TN86CHT-MASV

22. CYLINDER BLOCK

Fig. No. Fig. Name

23. GEAR HOUSING
24. FLYWHEEL HOUSING & OIL SUMP
25. CYLINDER HEAD & BONNET
26. SUCTION MANIFOLD
27. EXHAUST MANIFOLD
28. DIESEL PARTICULATE FILTER(DPF)
29. CAMSHAFT & DRIVING GEAR
30. TURBINE
31. CRANKSHAFT & PISTON
32. LUB. OIL SYSTEM
33. LUB. OIL PIPE
34. COOLING WATER SYSTEM
35. FUEL SUPPLY PUMP
36. FUEL INJECTION VALVE
37. FUEL PIPE
38. STARTER MOTOR
39. GENERATOR
40. ELECTRONIC CONTROL UNIT(ECU)
41. ELECTRIC PARTS
42. ACCESSORY

Fig.1. CYLINDER BLOCK

(A)=3TNV86CT-MASV (D)=
(B)=3TN86CHT-MASV (E)=
(C)= (F)=

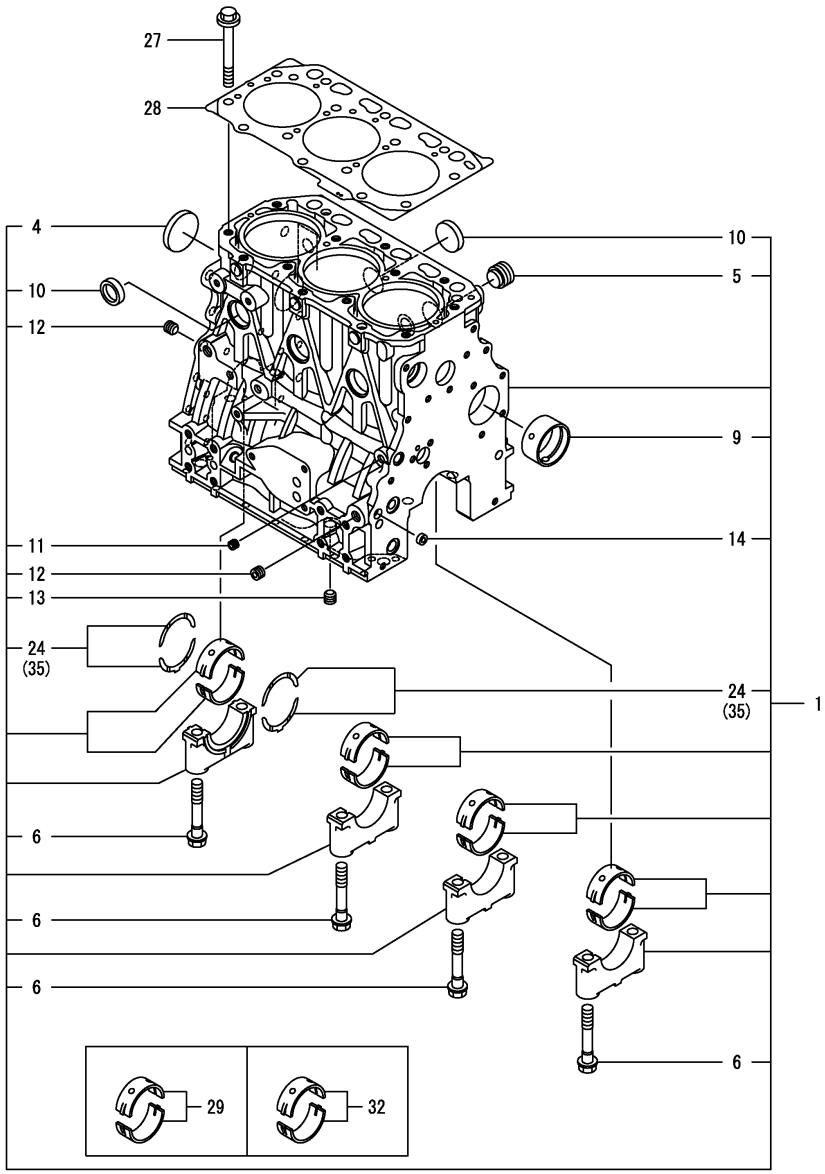

No.	Lev.	Parts No.	Description	Q'ty (A)	(B)	(C)	(D)	(E)	(F)	I	R
1	1	129A01-01560	BLOCK ASSY, CYLINDER	1							
4	2	129001-01250	PLUG, 50	1							
5	2	171051-01921	PLUG, NPTF1	1							
6	2	129150-02020	BOLT, METAL CAP	8							
9	2	129795-02412	BUSH, CAMSHAFT	1							
10	2	27241-300000	PLUG(30	6							
11	2	124060-01050	PLUG, PT1/8	1							
12	2	124160-01910	PLUG, PT1/4	2							
13	2	124160-01910	PLUG, PT1/4	1							
14	2	27241-120000	PLUG, 12	1							
24	2	129150-02931	METAL ASSY, THRUST	2							
27	1	129150-01200	BOLT, CYLINDER HEAD	14							
28	1	129A01-01331	GASKET ASSY, HEAD	1							
29	1	129001-02931	METAL ASSY, MAIN	4							1
32	1	129150-02871	METAL ASSY, MAIN .25	4							2
35	1	129150-02941	METAL ASSY, 0.25 OS	1							3

Remarks
(1)Spare parts.
(2)Under-sized(U.S.=0.25) parts.
(3)Over-sized(O.S.=0.25) parts.

N:Old $\frac{\text{Yes}}{\text{No}}$ New, Q:Old $\frac{\text{No}}{\text{Yes}}$ New, R:Old $\frac{\text{Yes}}{\text{Yes}}$ New, S:Old $\frac{\text{No}}{\text{No}}$ New, W:Add, Z:Discontinued, F:Interchangeable by set, K:Q'ty Change

Copyright (C) 2021 YANMAR GLOBAL CS CO., LTD. All RightsReserved.

Fig.2. GEAR HOUSING

(A)=3TNV86CT-MASV (D)=
(B)=3TN86CHT-MASV (E)=
(C)= (F)=

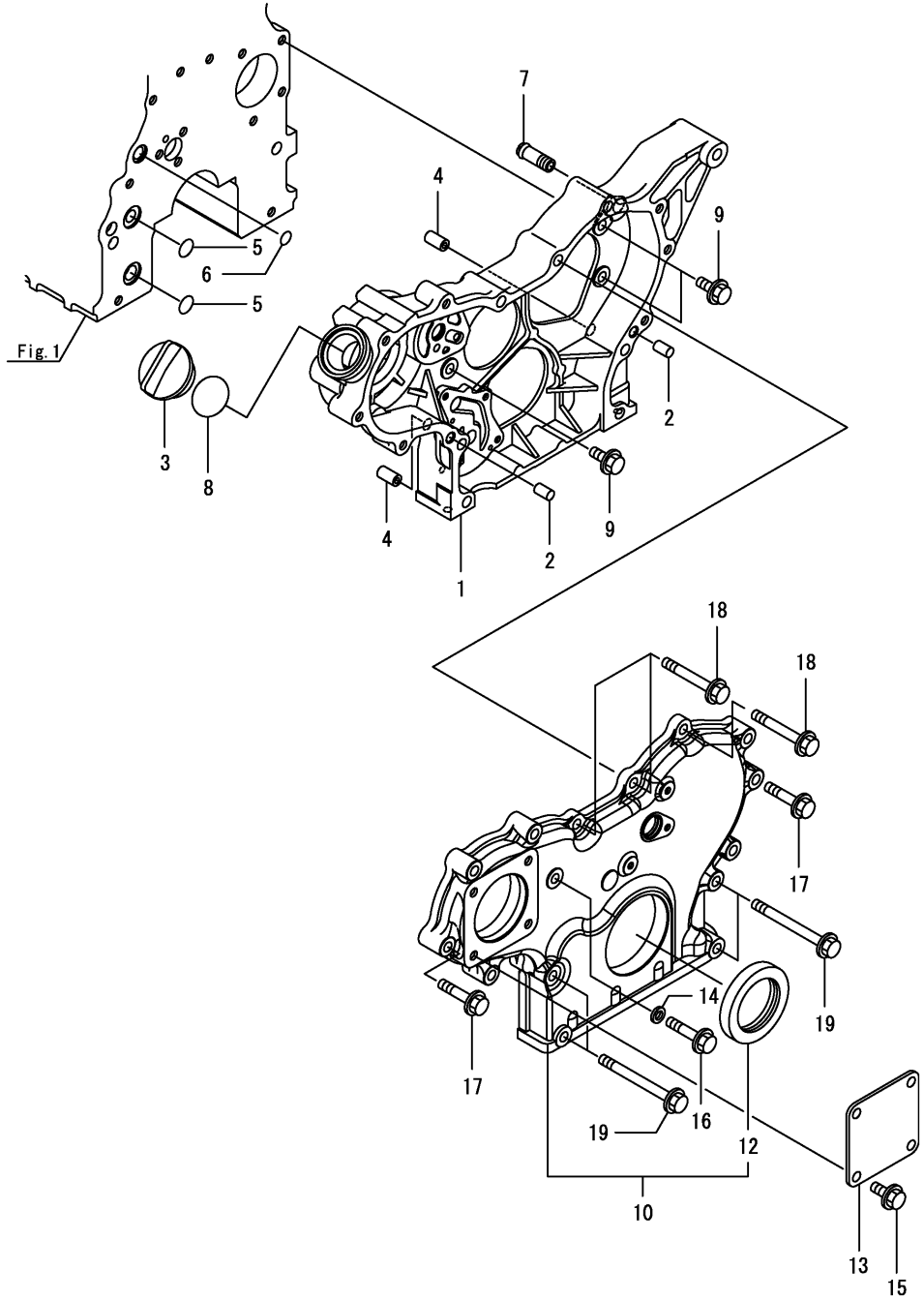

No.	Lev.	Parts No.	Description	Q'ty (A)	(B)	(C)	(D)	(E)	(F)	I	R
1	1	129A33-01500	CASE, GEAR	1							
2	1	129100-01580	PIN, PARALLEL 8X16	2							
3	1	124160-01751	CAP, FILLER	1							
4	1	129795-01950	PIPE, KNOCK L=18	2							
5	1	119609-32040	O-RING, P16	2							
6	1	119624-32040	O-RING, P12.0	1							
7	1	129122-44480	JOINT, PT1/4	1							
8	1	24311-000320	O-RING, 1AP32.0	1							
9	1	26106-080162	BOLT, M8X 16 PLATED	3							
10	1	129A00-01550	COVER ASSY, CASE	1							
12	2	119934-01800	SEAL, OIL	1							
13	1	124240-01871	COVER,HYDRAULIC PUMP	1							
14	1	22190-080002	WASHER, SEAL 8	1							
15	1	26106-080162	BOLT, M8X 16 PLATED	4							
16	1	26106-080352	BOLT, M8X 35 PLATED	1							
17	1	26106-080402	BOLT, M8X 40 PLATED	7							
18	1	26106-080602	BOLT, M8X 60 PLATED	3							
19	1	26106-080852	BOLT, M8X 85 PLATED	4							

N:Old $\xleftarrow[\text{No}]{\text{Yes}}$ New, Q:Old $\xleftarrow[\text{Yes}]{\text{No}}$ New, R:Old $\xleftarrow[\text{Yes}]{\text{Yes}}$ New, S:Old $\xleftarrow[\text{No}]{\text{No}}$ New, W:Add, Z:Discontinued, F:Interchangeable by set, K:Q'ty Change

Copyright (C) 2021 YANMAR GLOBAL CS CO., LTD. All RightsReserved.

Fig.3. FLYWHEEL HOUSING & OIL SUMP

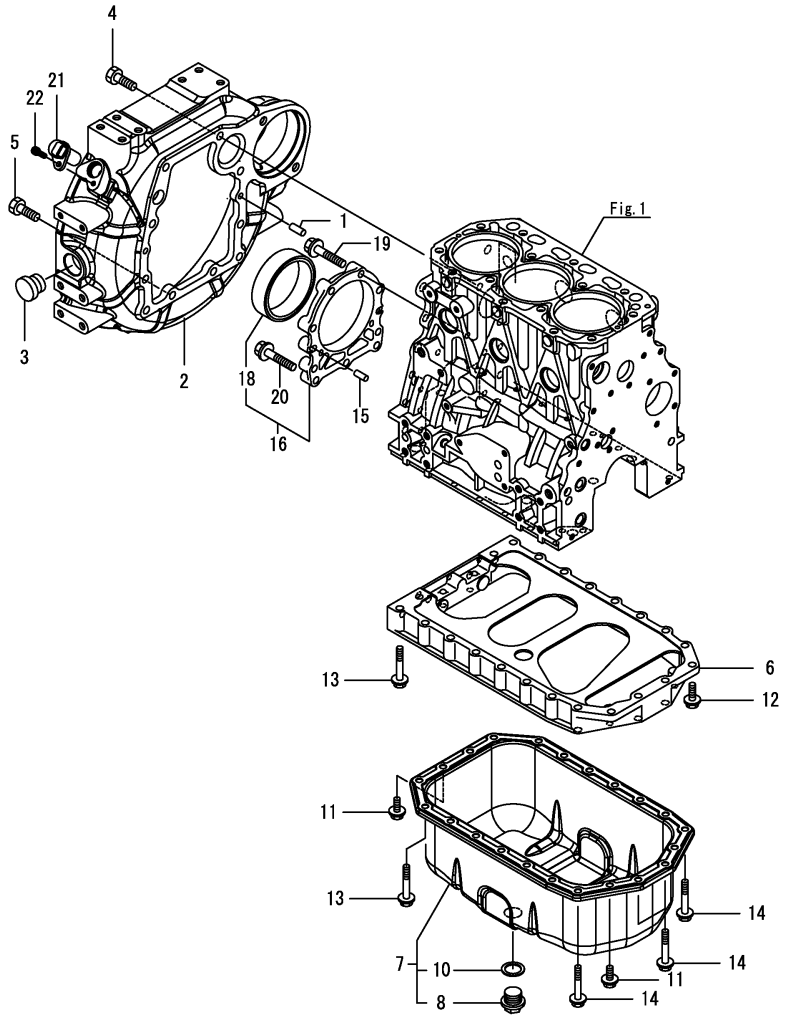

(A)=3TNV86CT-MASV (D)=
(B)=3TN86CHT-MASV (E)=
(C)= (F)=

No.	Lev.	Parts No.	Description	Q'ty (A)	(B)	(C)	(D)	(E)	(F)	I	R
1	1	129100-01580	PIN, PARALLEL 8X16	2							
2	1	129A00-01602	HOUSING, FLYWHEEL	1							
3	1	119620-01750	CAP, WHEEL COVER	1							
4	1	26206-100252	BOLT, M10X 25 PLATED	6							
5	1	26206-100302	BOLT, M10X 30 PLATED	4							
6	1	129100-01730	SPACER, OIL PAN	1							
7	1	129136-01780	OIL PAN ASSY	1							
8	2	119640-01640	PLUG, DRAIN M22	1							
10	2	22190-220002	WASHER, SEAL 22	1							
11	1	26106-080162	BOLT, M8X 16 PLATED	4							
12	1	26106-080252	BOLT, M8X 25 PLATED	2							
13	1	26106-080452	BOLT, M8X 45 PLATED	16							
14	1	26106-080502	BOLT, M8X 50 PLATED	4							
15	1	129100-01580	PIN, PARALLEL 8X16	2							
16	1	129648-01600	CASE ASSY, OIL SEAL	1							
18	2	129648-01780	SEAL, OIL	1							
19	1	129486-01670	BOLT, M8X30	6							
20	1	26106-080352	BOLT, M8X 35 PLATED	3							
21	1	129A00-21710	SENSOR, FLYWHEEL	1							1
22	1	26450-060162	BOLT, M6X 16	1							

Remarks
(1)When replacing this part, it is necessary to update the software of the ECU using the designated service tool.
Please refer to the Service Manual for details.

N:Old $\xleftrightarrow[\text{No}]{\text{Yes}}$ New, Q:Old $\xleftrightarrow[\text{Yes}]{\text{No}}$ New, R:Old $\xleftrightarrow[\text{Yes}]{\text{Yes}}$ New, S:Old $\xleftrightarrow[\text{No}]{\text{No}}$ New, W:Add, Z:Discontinued, F:Interchangeable by set, K:Q'ty Change

Copyright (C) 2021 YANMAR GLOBAL CS CO., LTD. All RightsReserved.

Fig.4. CYLINDER HEAD & BONNET

(A)=3TNV86CT-MASV (D)=
(B)=3TN86CHT-MASV (E)=
(C)= (F)=

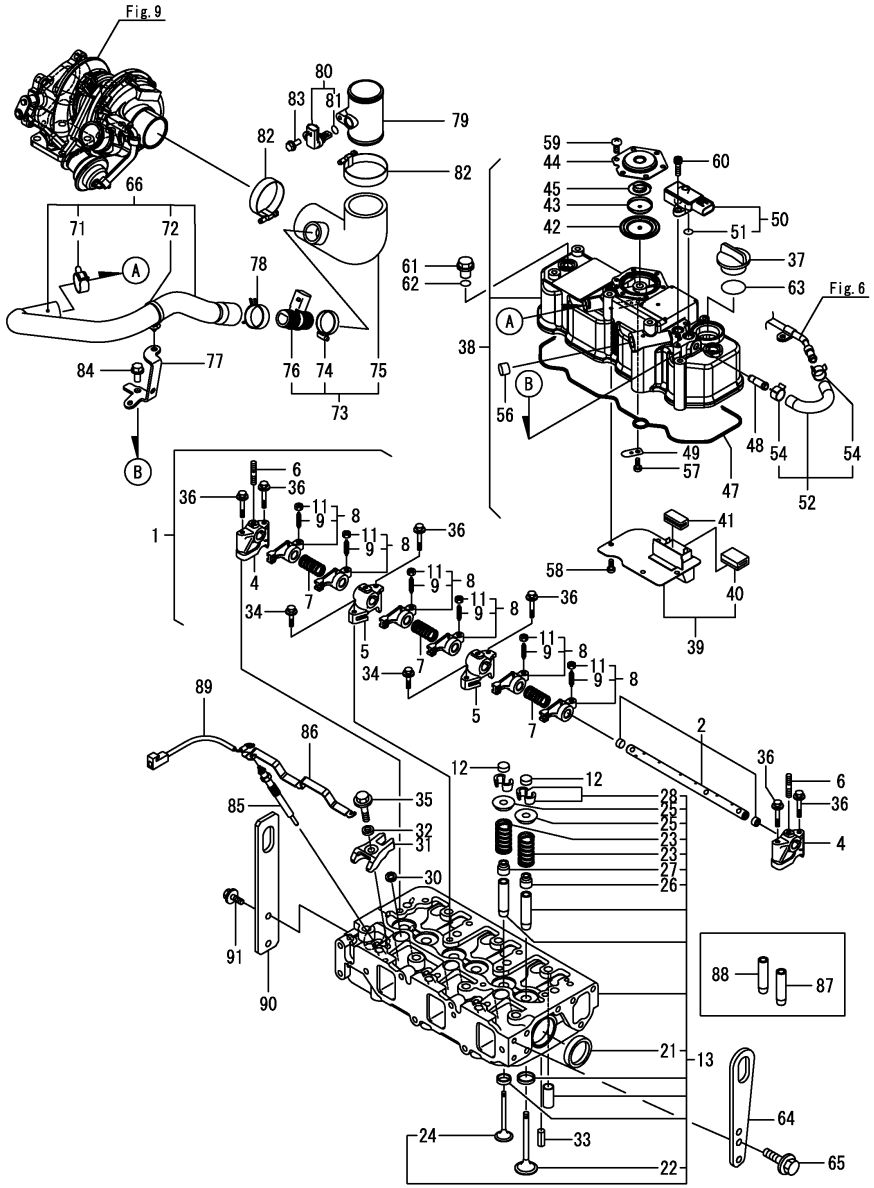

No.	Lev.	Parts No.	Description	Q'ty (A)	(B)	(C)	(D)	(E)	(F)	I	R
1	1	129004-11241	SHAFT ASSY, ROCKER	1							
2	2	129004-11251	SHAFT, ROCKER ARM	1							
4	2	119802-11260	SUPPORT, ROCKER ARM	2							
5	2	119802-11270	SUPPORT, ROCKER ARM	2							
6	2	119802-11280	BOLT, STUD	3							
7	2	129150-11280	SPRING, SHAFT	3							
8	2	129004-11650	ARM ASSY, ROCKER	6							
9	3	129150-11230	SCREW, VALVE ADJUST	6							
11	3	129150-11750	NUT, M8XP1.0	6							
12	1	129150-11370	CAP, VALVE	6							
13	1	129A01-11700	HEAD ASSY, CYLINDER	1							
21	3	27241-400000	PLUG, 40	2							
22	2	129005-11100	VALVE, INTAKE	3							
23	2	129795-11120	SPRING, VALVE	6							
24	2	129100-11130	VALVE, EXHAUST	3							
25	2	129795-11180	RETAINER, SPRING	6							
26	2	124460-11340	SEAL, VALVE STEM	3							
27	2	129A00-11340	SEAL, VALVE STEM	3							
28	2	27310-080001	COTTER, 8	6							
30	1	129978-11871	GASKET, INJECTOR	3							
31	1	129A00-11900	RETAINER, INJECTOR	3							
32	1	120270-54410	WASHER, INJECTOR	3							
33	1	22351-060012	PIN, SPRING 6.0X12	2							
34	1	26106-080252	BOLT, M8X 25 PLATED	2							
35	1	26106-080352	BOLT, M8X 35 PLATED	3							
36	1	26106-080502	BOLT, M8X 50 PLATED	6							
37	1	124160-01751	CAP, FILLER	1							
38	1	129A01-11360	BONNET ASSY, HEAD	1							
39	2	129004-03010	PLATE, BAFFLE	1							
40	3	119802-03070	BAFFLE, BREATHER	1							
41	2	129150-03070	BAFFLE, BREATHER	1							
42	2	123907-03100	DIAPHRAGM, BREATHER	1							
43	2	123907-03110	PLATE, CENTER	1							
44	2	123907-03120	PLATE, BREATHER	1							
45	2	123907-03140	SPRING, DIAPHRAGM	1							
47	2	129A00-11310	GASKET, BONNET	1							
48	2	129A00-11330	JOINT	1							
49	2	129009-11340	SPRING, PLATE	1							
50	2	129978-12700	SENSOR, PRESSURE	1							1
51	3	129A00-12780	O-RING, EGR SENSOR	2							
52	2	129A00-13360	HOSE ASSY, PRESSURE	1							
54	3	129A00-13380	CLIP, HOSE 14	2							
56	2	119640-61400	PLUG	1							
57	2	22857-500100	SCREW, 5X10	1							
58	2	22857-500100	SCREW, 5X10	4							
59	2	22857-500100	SCREW, 5X10	6							
60	2	26450-060162	BOLT, M6X 16	2							
61	1	124160-11360	KNOB, BONNET	3							
62	1	24311-000120	O-RING, 1AP12.0	3							
63	1	24311-000320	O-RING, 1AP32.0	1							
64	1	129900-07900	LIFTER, ENGINE	1							

Remarks
(1)When replacing this part, it is necessary to update the software of the ECU using the designated service tool. Please refer to the Service Manual for details.
(2)Spare parts.

N:Old $\xleftarrow[\text{No}]{\text{Yes}}$ New, Q:Old $\xleftarrow[\text{Yes}]{\text{No}}$ New, R:Old $\xleftrightarrow[\text{Yes}]{\text{Yes}}$ New, S:Old $\xleftrightarrow[\text{No}]{\text{No}}$ New, W:Add, Z:Discontinued, F:Interchangeable by set, K:Q'ty Change

++ CONTINUE ++

Copyright (C) 2021 YANMAR GLOBAL CS CO., LTD. All RightsReserved.

Fig.4. CYLINDER HEAD & BONNET

(A)=3TNV86CT-MASV
(B)=3TN86CHT-MASV
(C)=
(D)=
(E)=
(F)=

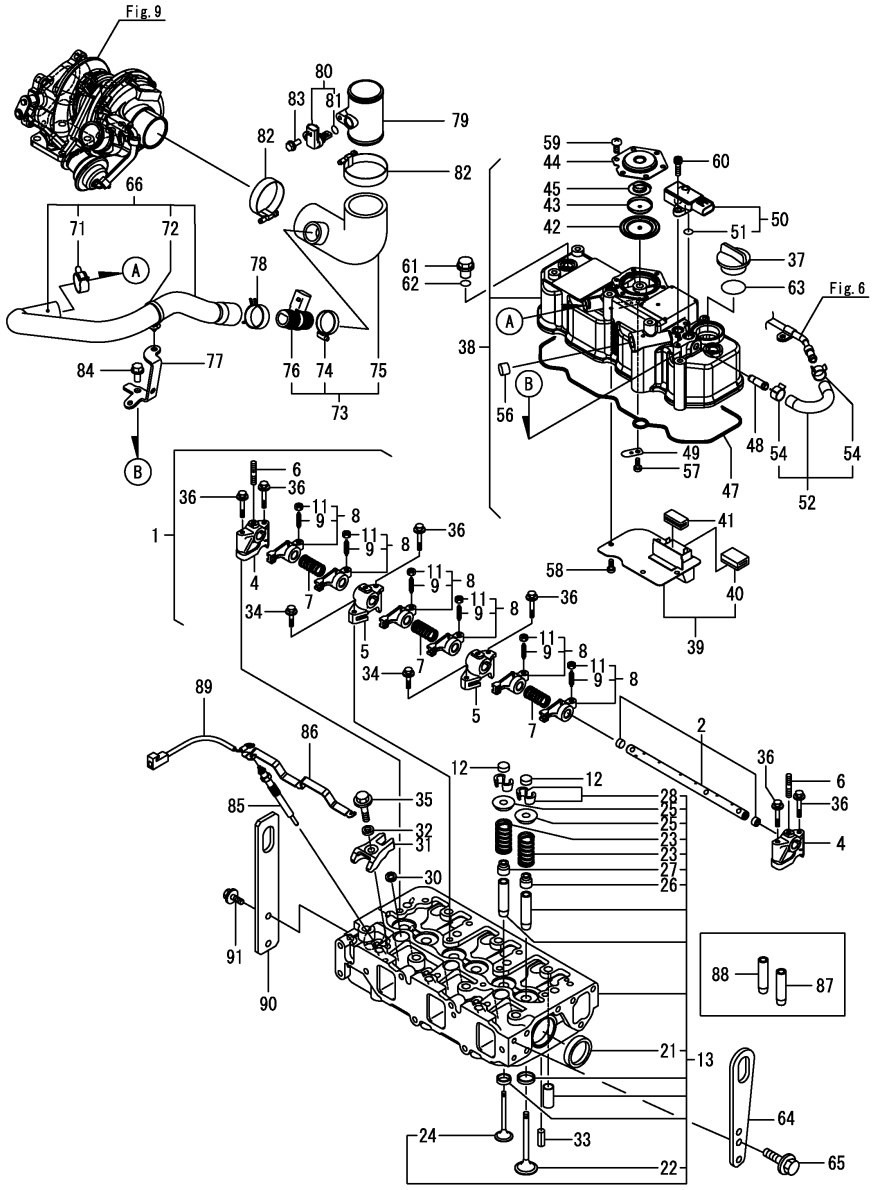

No.	Lev.	Parts No.	Description	Q'ty (A)	(B)	(C)	(D)	(E)	(F)	I	R
65	1	26106-080162	BOLT, M8X 16 PLATED	2							
66	1	129A72-03100	HOSE ASSY, BREATHER	1							
71	2	129410-03990	CLAMP, HOSE 21.5	1							
72	2	129A00-91200	CLIP, BAND	1							
73	1	129A32-03120	JOINT ASSY, 3-WAY	1							
74	2	129978-03280	CLIP, HOSE 35.0	1							
75	2	129A32-03350	JOINT, BREATHER	1							
76	2	129A01-77310	HEATER, PIPE	1							
77	1	129A72-03130	STAY, BREATHER HOSE	1							
78	1	129978-03270	CLIP, HOSE 26.0	1							
79	1	129978-03380	JOINT, BREATHER	1							
80	1	129A00-12711	SENSOR, TEMPERATURE	1							
81	2	129A00-12790	O-RING, TEMP SENSOR	1							
82	1	23000-070000	CLAMP, 70	2							
83	1	26106-060142	BOLT, M6X 14 PLATED	1							
84	1	26106-080162	BOLT, M8X 16 PLATED	1							
85	1	129008-77800	PLUG, GLOW	3							
86	1	129A00-77820	CONNECTOR, GLOW PLUG	1							
87	1	120130-11860	GUIDE, VALVE	3							2
88	1	129150-11810	GUIDE, VALVE	3							2
89	1	119803-77830	HARNESS, WIRE	1							
90	1	129944-07910	LIFTER	1							
91	1	26106-080162	BOLT, M8X 16 PLATED	2							

Remarks
(1)When replacing this part, it is necessary to update the software of the ECU using the designated service tool. Please refer to the Service Manual for details.
(2)Spare parts.

N:Old $\xleftarrow[\text{No}]{\text{Yes}}$ New, Q:Old $\xleftarrow[\text{Yes}]{\text{No}}$ New, R:Old $\xleftarrow[\text{Yes}]{\text{Yes}}$ New, S:Old $\xleftarrow[\text{No}]{\text{No}}$ New, W:Add, Z:Discontinued, F:Interchangeable by set, K:Q'ty Change

Copyright (C) 2021 YANMAR GLOBAL CS CO., LTD. All RightsReserved.

Fig.5. SUCTION MANIFOLD

(A)=3TNV86CT-MASV (D)=
(B)=3TN86CHT-MASV (E)=
(C)= (F)=

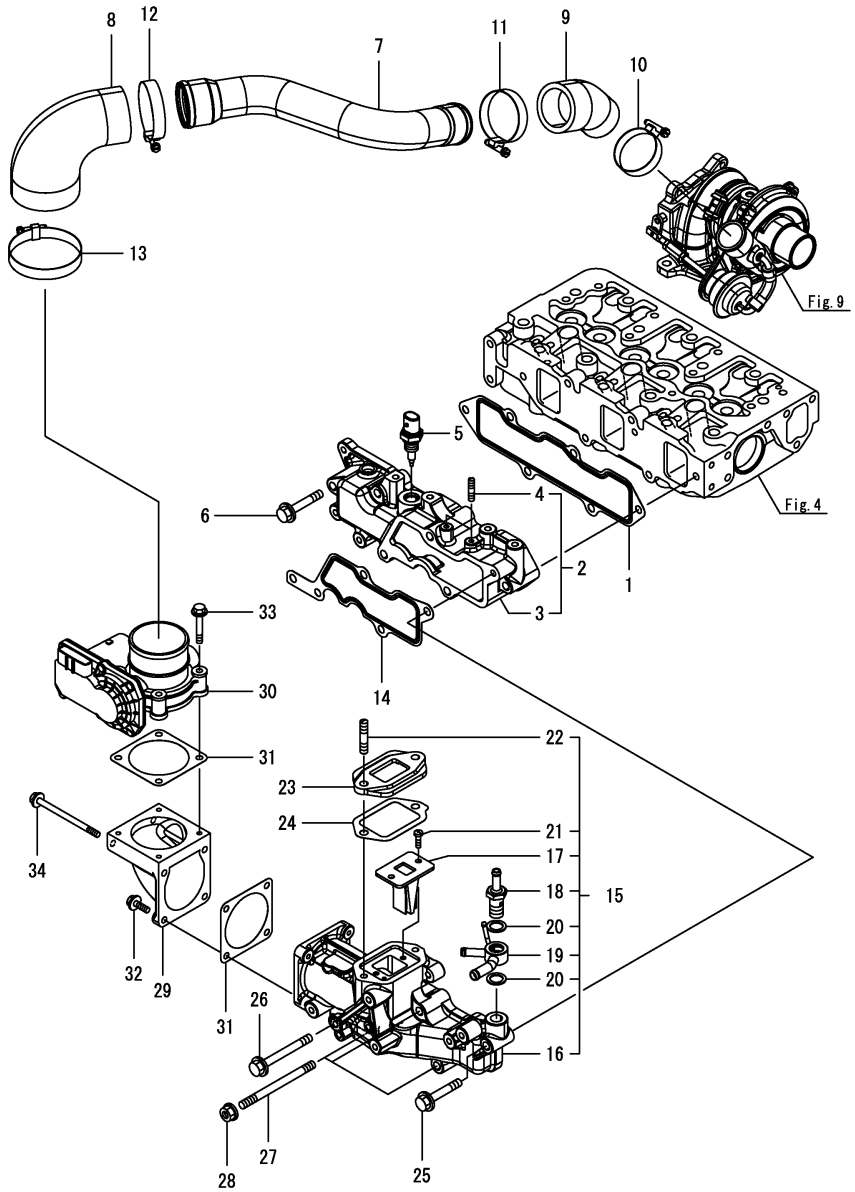

No.	Lev.	Parts No.	Description	Q'ty (A)	(B)	(C)	(D)	(E)	(F)	I	R
1	1	129A00-12110	GASKET, MANIFOLD	1							
2	1	129A01-12150	MANIFOLD ASSY,INTAKE	1							
3	2	129A01-12100	MANIFOLD, INTAKE	1							
4	2	26216-060202	STUD, M6X 20	2							
5	1	129A00-12721	SENSOR,AIR TEMP	1							1
6	1	26106-080502	BOLT, M8X 50 PLATED	3							
7	1	129A01-18200	DUCT, AIR	1							
8	1	129A01-18210	JOINT, RUBBER	1							
9	1	129A01-18220	JOINT, RUBBER	1							
10	1	23000-048000	CLAMP, 48	1							
11	1	23000-054000	CLAMP, 54	1							
12	1	23000-060000	CLAMP, 60	1							
13	1	23000-075000	CLAMP, 75	1							
14	1	129A00-12810	GASKET, COLLECTOR	1							
15	1	129A01-12851	COLLECTOR ASSY	1							
16	2	129A01-12800	COLLECTOR, INTAKE	1							
17	2	129C01-13700	VALVE, REED	1							
18	2	129A00-59110	JOINT, HOSE M14	1							
19	2	129A00-59120	JOINT, HOSE 14	1							
20	2	22190-140002	WASHER, SEAL 14	2							
21	2	22857-500160	SCREW, 5X16	2							
22	2	26216-080352	STUD, M8X 35	2							
23	1	129A00-13710	SPACER, EGR VALVE	1							
24	1	129A00-13720	GASKET, EGR-V SPACER	1							
25	1	26106-080502	BOLT, M8X 50 PLATED	1							
26	1	26106-080752	BOLT, M8X 75 PLATED	1							
27	1	26216-081052	STUD, M8X105	3							
28	1	26306-080002	NUT, M8	3							
29	1	129A00-12820	BEND, INTAKE	1							
30	1	129A00-12900	THROTTLE, INTAKE	1							1
31	1	129A00-12910	GASKET, THROTTLE	2							
32	1	26106-060202	BOLT, M6X 20 PLATED	2							
33	1	26106-060402	BOLT, M6X 40 PLATED	4							
34	1	26106-060902	BOLT, M6X 90 PLATED	2							

Remarks
(1)When replacing this part, it is necessary to update the software of the ECU using the designated service tool.
Please refer to the Service Manual for details.

N:Old $\overset{\text{Yes}}{\underset{\text{No}}{\leftrightarrows}}$ New, Q:Old $\overset{\text{No}}{\underset{\text{Yes}}{\leftrightarrows}}$ New, R:Old $\overset{\text{Yes}}{\underset{\text{Yes}}{\leftrightarrows}}$ New, S:Old $\overset{\text{No}}{\underset{\text{No}}{\leftrightarrows}}$ New, W:Add, Z:Discontinued, F:Interchangeable by set, K:Q'ty Change

Copyright (C) 2021 YANMAR GLOBAL CS CO., LTD. All RightsReserved.

Fig.6. EXHAUST MANIFOLD

(A)=3TNV86CT-MASV
(B)=3TN86CHT-MASV
(C)=
(D)=
(E)=
(F)=

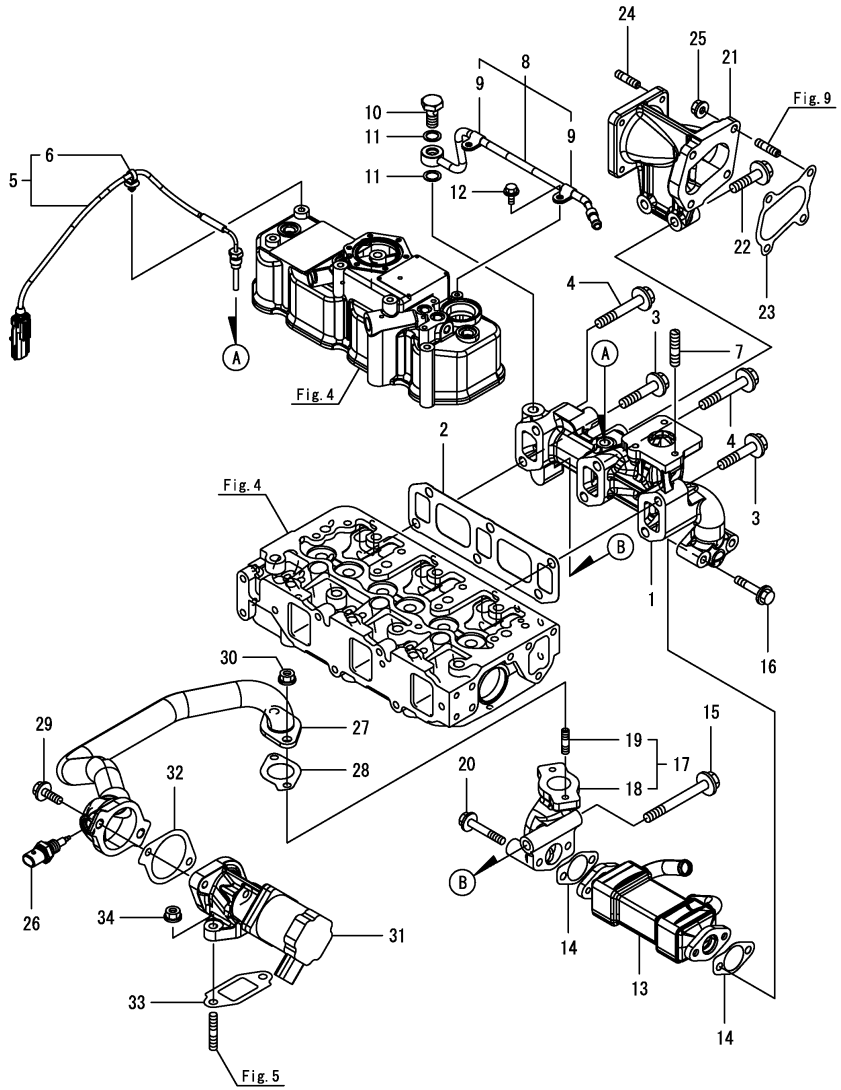

No.	Lev.	Parts No.	Description	Q'ty (A)	(B)	(C)	(D)	(E)	(F)	I	R
1	1	129A01-13101	MANIFOLD, EXHAUST	1							
2	1	129A00-13110	GASKET, MANIFOLD	1							
3	1	129A01-13601	BOLT, M10X50 10.9T	2							
4	1	129F01-13620	BOLT, M10X65 10.9T	4							
5	1	129A01-13760	SENSOR, TEMPERATURE	1							1
6	2	129A00-91200	CLIP, BAND	1							
7	1	129418-18320	STUD, M8X20	3							
8	1	129A00-13300	PIPE ASSY, PRESSURE	1							
9	2	23297-080061	CLAMP, A8X 6	2							
10	1	129A00-13350	BOLT, PIPE JOINT	1							
11	1	23414-120000	GASKET, 12X1.0	2							
12	1	26106-060122	BOLT, M6X 12 PLATED	2							
13	1	129A00-13400	COOLER, EGR	1							
14	1	129A00-13410	GASKET, EGR COOLER	2							
15	1	129F01-13600	BOLT, M10X90 10.9T	1							
16	1	129E00-13620	BOLT, M8X40 10.9	2							
17	1	129A00-13851	PIPE, EGR OUTLET	1							
18	2	129A00-13861	PIPE, EGR OUTLET	1							
19	2	129418-18320	STUD, M8X20	2							
20	1	26106-080502	BOLT, M8X 50 PLATED	2							
21	1	129A01-13350	PIPE, EXHAUST	1							
22	1	129F01-13650	BOLT, M10X40 10.9T	2							
23	1	129A01-18090	GASKET, TURBINE OUT	1							
24	1	119131-18320	STUD, M8X22	4							
25	1	26306-080002	NUT, M8	4							
26	1	129A00-13752	SENSOR,EGR GAS TEMP	1							1
27	1	129A00-13800	PIPE, EGR	1							
28	1	129927-13810	GASKET, EGR PIPE	1							
29	1	26106-080252	BOLT, M8X 25 PLATED	2							
30	1	26306-080002	NUT, M8	2							
31	1	129A00-13901	VALVE, EGR	1							1
32	1	129A00-13910	GASKET, EGR-V INLET	1							
33	1	129A00-13920	GASKET, EGR-V OUTLET	1							
34	1	26306-080002	NUT, M8	2							

Remarks
(1)When replacing this part, it is necessary to update the software of the ECU using the designated service tool.
Please refer to the Service Manual for details.

N:Old $\frac{\text{Yes}}{\text{No}}$ New, Q:Old $\frac{\text{No}}{\text{Yes}}$ New, R:Old $\frac{\text{Yes}}{\text{Yes}}$ New, S:Old $\frac{\text{No}}{\text{No}}$ New, W:Add, Z:Discontinued, F:Interchangeable by set, K:Q'ty Change

Copyright (C) 2021 YANMAR GLOBAL CS CO., LTD. All RightsReserved.

Fig.7. DIESEL PARTICULATE FILTER(DPF)

(A)=3TNV86CT-MASV (D)=
(B)=3TN86CHT-MASV (E)=
(C)= (F)=

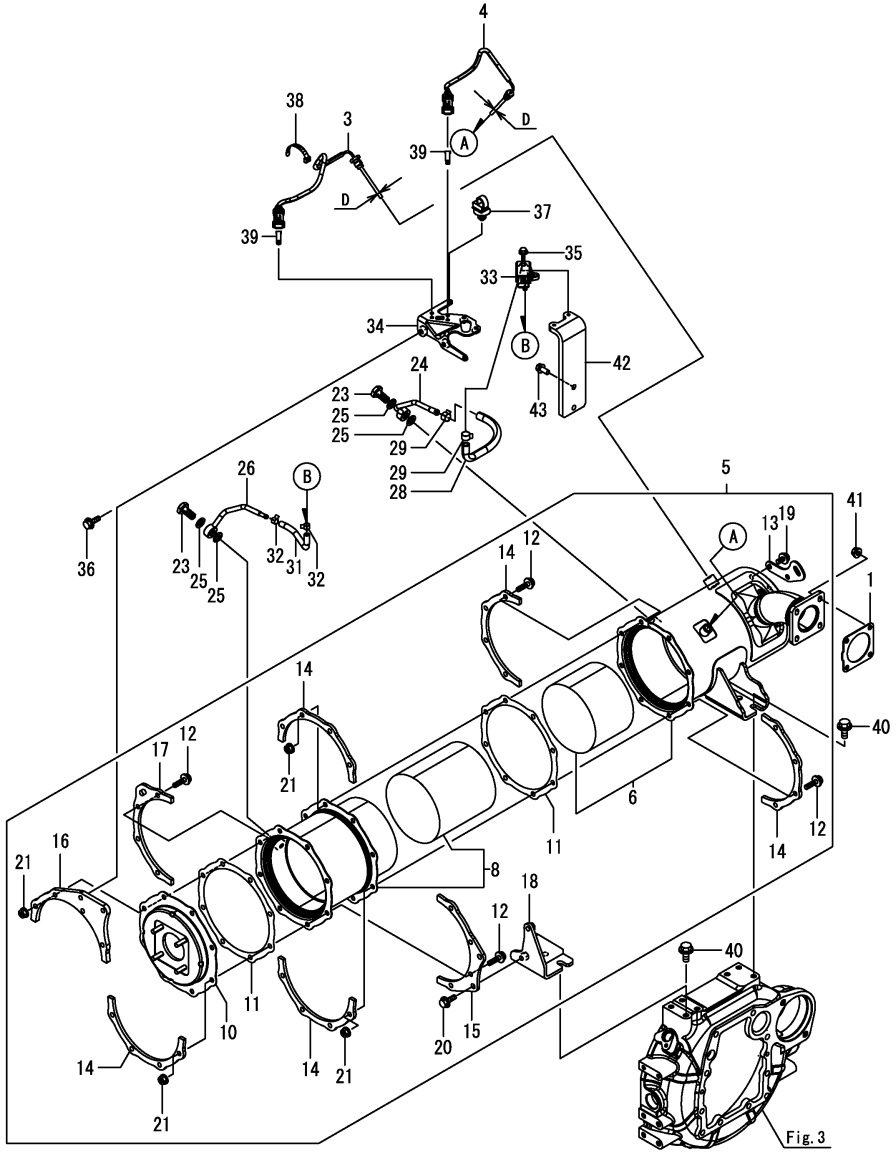

No.	Lev.	Parts No.	Description	Q'ty (A)	(B)	(C)	(D)	(E)	(F)	I	R
1	1	129930-13201	GASKET, SILENCER	1							
3	1	129C00-13860	SENSOR, ATD TEMP.DS+	1							1
4	1	129C00-13870	SENSOR, ATD TEMP.DS+	1							1
5	1	129A01-16030	DPF ASSY	1							1
6	2	129A01-16230	CASE, DOC	1							1
8	2	129C00-16400	CASE, SOOT FILTER	1							1
10	2	129A01-16550	FLANGE, OUTLET	1							
11	2	129A00-16600	GASKET, DPF	2							
12	2	129A00-16610	BOLT, M8X28 10.9T	16							
13	2	129C01-16690	LIFTER, DPF	1							
14	2	129A00-16700	STIFFENER, DPF A	5							
15	2	129A00-16710	STIFFENER, DPF B	1							
16	2	129A00-16730	STIFFENER, DPF C	1							
17	2	129A00-16740	STIFFENER, DPF C	1							
18	2	129C00-16801	STAY, DPF	1							
19	2	26106-080142	BOLT, M8X 14 PLATED	2							
20	2	26106-080222	BOLT, M8X 22 PLATED	2							
21	2	26306-080002	NUT, M8	16							
23	1	129A00-13350	BOLT, PIPE JOINT	2							
24	1	129A00-17300	PIPE, SENSOR	1							
25	1	129A00-17311	GASKET, SENSOR	4							
26	1	129A00-17350	PIPE, SENSOR	1							
28	1	129978-17500	HOSE,PRES EXH	1							
29	1	129A00-17520	CLIP, HOSE	2							
31	1	129C22-17610	HOSE, PRESSURE	1							
32	1	129A00-17570	CLIP, HOSE	2							
33	1	129978-17700	SENSOR, PRESSURE	1							1
34	1	129A00-17790	BRACKET, PRES SENSOR	1							
35	1	26106-060162	BOLT, M6X 16 PLATED	2							
36	1	26106-080202	BOLT, M8X 20 PLATED	2							
37	1	129A00-91200	CLIP, BAND	1							
38	1	129C00-91200	BAND	1							
39	1	129A00-91430	CLIP, CONNECTOR	2							
40	1	26106-100202	BOLT, M10X 20 PLATED	4							
41	1	26306-080002	NUT, M8	4							
42	1	129A88-17760	BRACKET, SENSOR	1							
43	1	26106-080202	BOLT, M8X 20 PLATED	2							

Remarks
(1)When replacing this part, it is necessary to update the software of the ECU using the designated service tool.
Please refer to the Service Manual for details.

N:Old $\xleftrightarrow[\text{No}]{\text{Yes}}$ New, Q:Old $\xleftrightarrow[\text{Yes}]{\text{No}}$ New, R:Old $\xleftrightarrow[\text{Yes}]{\text{Yes}}$ New, S:Old $\xleftrightarrow[\text{No}]{\text{No}}$ New, W:Add, Z:Discontinued, F:Interchangeable by set, K:Q'ty Change

Copyright (C) 2021 YANMAR GLOBAL CS CO., LTD. All RightsReserved.

Fig.8. CAMSHAFT & DRIVING GEAR

(A)=3TNV86CT-MASV (D)=
(B)=3TN86CHT-MASV (E)=
(C)= (F)=

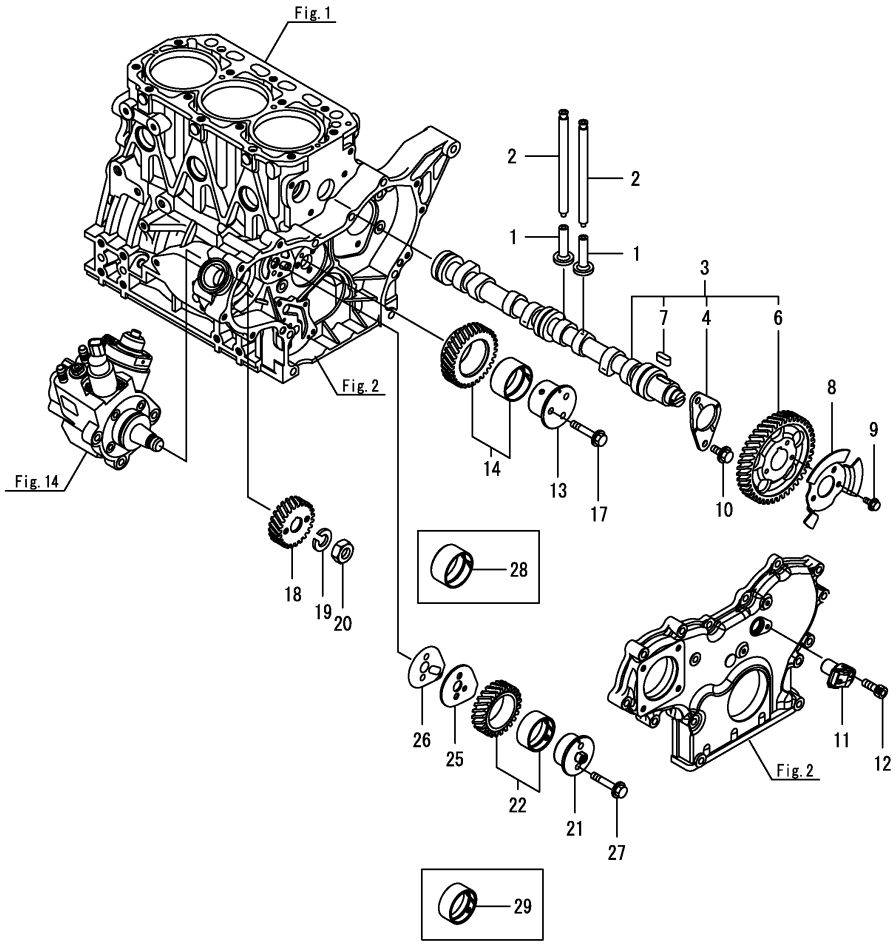

No.	Lev.	Parts No.	Description	Q'ty (A)	(B)	(C)	(D)	(E)	(F)	I	R
1	1	129150-14200	TAPPET	6							
2	1	129150-14400	ROD, PUSH L=178	6							
3	1	129A00-14580	CAMSHAFT ASSY	1							
4	2	129150-02450	METAL, THRUST	1							
6	2	129A00-14100	GEAR, CAMSHAFT	1							
7	2	22512-070140	KEY, 7X 14	1							
8	1	129A00-14701	PULSER, CAMSHAFT	1							
9	1	26106-060102	BOLT, M6X 10 PLATED	3							
10	1	26106-080142	BOLT, M8X 14 PLATED	2							
11	1	129A00-14710	SENSOR, ROTATION	1							
12	1	26450-060162	BOLT, M6X 16	1							
13	1	129A00-25050	SHAFT, IDLE GEAR A	1							
14	1	129A00-25110	GEAR ASSY, IDLE A	1							
17	1	26106-080452	BOLT, M8X 45 PLATED	3							
18	1	129A00-25900	GEAR, SUPPLY PUMP	1							
19	1	22217-180000	WASHER, SPRING 18	1							
20	1	26776-180002	NUT, LOCK M18	1							
21	1	129A00-25060	SHAFT, IDLE GEAR B	1							
22	1	129A00-25120	GEAR ASSY, IDLE B	1							
25	1	129A00-25200	PLATE, IDLE SHAFT B	1							
26	1	129A00-25210	GASKET, IDLE SHAFT B	1							
27	1	26106-080402	BOLT, M8X 40 PLATED	2							
28	1	119802-25071	BUSH, IDLE GEAR	1							1
29	1	129A00-25080	BUSH, IDLE GEAR B	1							1

Remarks
(1)Spare parts.

N:Old $\xleftrightarrow[\text{No}]{\text{Yes}}$ New, Q:Old $\xleftrightarrow[\text{Yes}]{\text{No}}$ New, R:Old $\xleftrightarrow[\text{Yes}]{\text{Yes}}$ New, S:Old $\xleftrightarrow[\text{No}]{\text{No}}$ New, W:Add, Z:Discontinued, F:Interchangeable by set, K:Q'ty Change

Copyright (C) 2021 YANMAR GLOBAL CS CO., LTD. All RightsReserved.

Fig.9. TURBINE

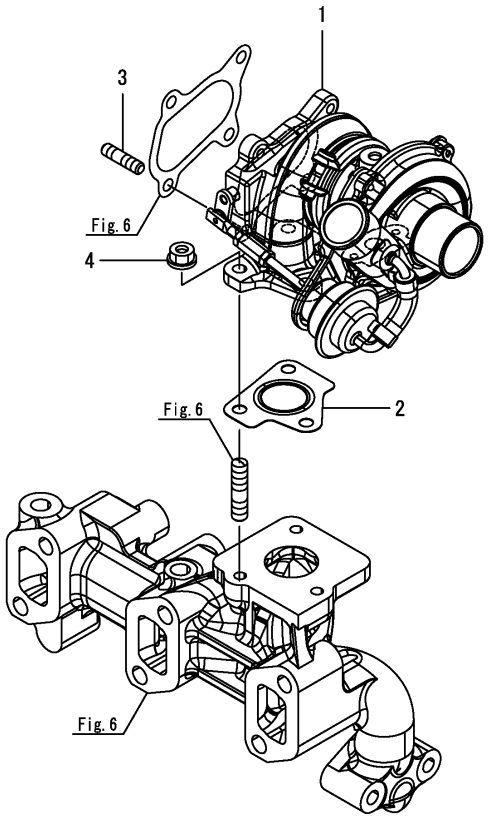

(A)=3TNV86CT-MASV (D)=
(B)=3TN86CHT-MASV (E)=
(C)= (F)=

No.	Lev.	Parts No.	Description	Q'ty (A)	(B)	(C)	(D)	(E)	(F)	I	R
1	1	129A01-18011	TURBOCHARGER, RHF3	1							
2	1	129A01-18080	GASKET, TURBINE IN	1							
3	1	119131-18320	STUD, M8X22	4							
4	1	26306-080002	NUT, M8	3							

N:Old $\xleftrightarrow[\text{No}]{\text{Yes}}$ New, Q:Old $\xleftrightarrow[\text{Yes}]{\text{No}}$ New, R:Old $\xleftrightarrow[\text{Yes}]{\text{Yes}}$ New, S:Old $\xleftrightarrow[\text{No}]{\text{No}}$ New, W:Add, Z:Discontinued, F:Interchangeable by set, K:Q'ty Change

Copyright (C) 2021 YANMAR GLOBAL CS CO., LTD. All RightsReserved.

Fig.10. CRANKSHAFT & PISTON

(A)=3TNV86CT-MASV (D)=
(B)=3TN86CHT-MASV (E)=
(C)= (F)=

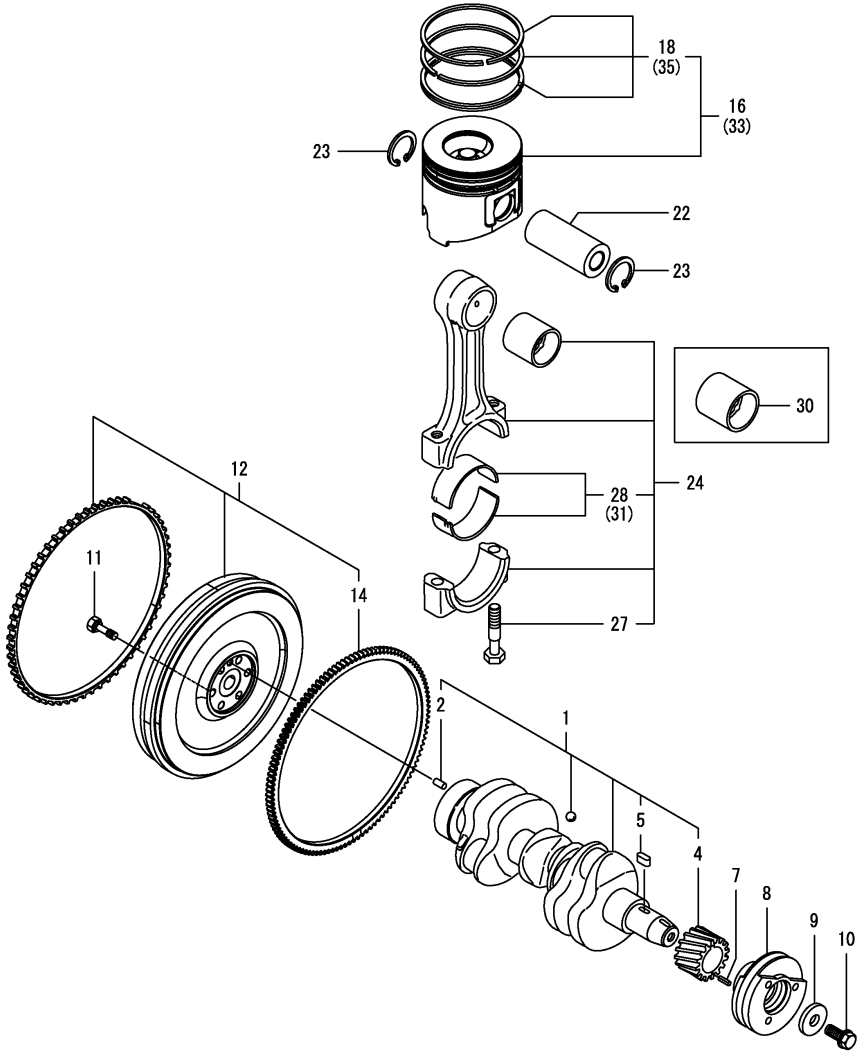

No.	Lev.	Parts No.	Description	Q'ty (A)	(B)	(C)	(D)	(E)	(F)	I	R
1	1	129008-21000	CRANKSHAFT ASSY	1							
2	2	129100-01580	PIN, PARALLEL 8X16	1							
4	2	119803-21200	GEAR, CRANKSHAFT	1							
5	2	22512-070140	KEY, 7X 14	1							
7	1	22351-030010	PIN, SPRING 3.0X10	1							
8	1	129005-21650	V-PULLEY, CRANKSHAFT	1							
9	1	129795-21661	WASHER, 14	1							
10	1	121850-21680	BOLT, V-PULLEY	1							
11	1	121111-21501	BOLT, FLYWHEEL	6							
12	1	129A24-21580	FLYWHEEL ASSY	1							
14	2	119865-21600	GEAR, RING Z=116	1							
16	1	129A01-22080	PISTON ASSY	3							
18	2	129A01-22500	RING SET, PISTON	3							
22	1	129202-22300	PIN, PISTON D26 L70	3							
23	1	22252-000260	RING, 26	6							
24	1	729402-23100	ROD ASSY, CONNECTING	3							
27	2	121550-23200	BOLT, CONNECTING ROD	6							
28	2	129150-23601	METAL ASSY,CRANK PIN	3							
30	1	129100-23910	METAL, PISTON PIN	3							1
31	1	129150-23611	METAL, CRANK PIN .25	3							2
33	1	129A01-22900	PISTON ASSY, 0.25 OS	3							3
35	2	129A01-22950	RING SET, PISTON .25	3							3

Remarks
(1)Spare parts.
(2)Under-sized(U.S.=0.25) parts.
(3)Over-sized(O.S.=0.25) parts.

N:Old ◄Yes/No► New, Q:Old ◄No/Yes► New, R:Old ◄Yes/Yes► New, S:Old ◄No/No► New, W:Add, Z:Discontinued, F:Interchangeable by set, K:Q'ty Change

Copyright (C) 2021 YANMAR GLOBAL CS CO., LTD. All RightsReserved.

Fig.11. LUB. OIL SYSTEM

(A)=3TNV86CT-MASV (D)=
(B)=3TN86CHT-MASV (E)=
(C)= (F)=

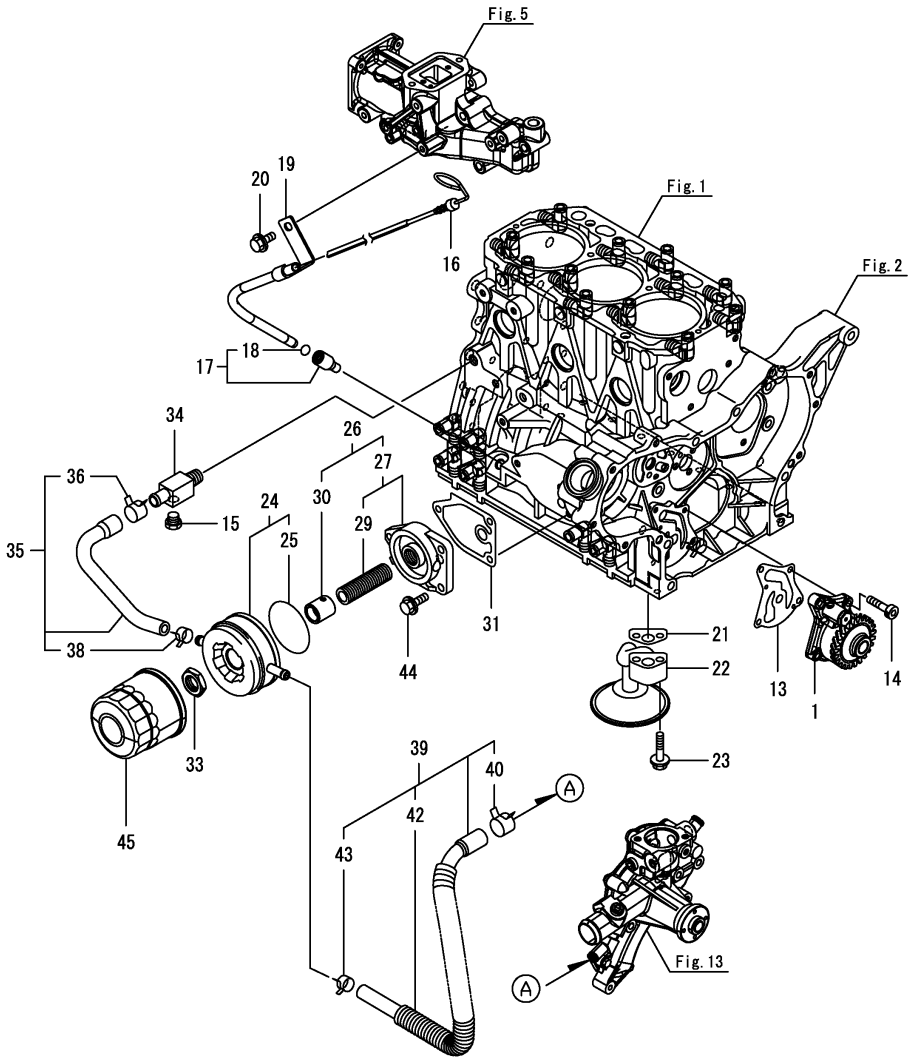

No.	Lev.	Parts No.	Description	Q'ty (A)	(B)	(C)	(D)	(E)	(F)	I	R
1	1	129A01-32000	PUMP ASSY, OIL	1							
13	1	129486-32020	GASKET, PUMP	1							
14	1	26450-060252	BOLT, M6X 25	4							
15	1	171056-49120	PLUG, DRAIN R1/4	1							
16	1	129601-34801	DIPSTICK, OIL	1							
17	1	119260-34810	GUIDE, DIPSTICK	1							
18	2	24316-240100	O-RING, 4DP10A	1							
19	1	129A00-34870	GUIDE, DIPSTICK	1							
20	1	26106-080162	BOLT, M8X 16 PLATED	1							
21	1	129150-35042	GASKET, INLET PIPE	1							
22	1	129100-35301	PIPE ASSY, OIL INLET	1							
23	1	26106-080352	BOLT, M8X 35 PLATED	2							
24	1	129508-33031	COOLER ASSY, OIL	1							
25	2	129508-33060	GASKET, COOLER	1							
26	1	129508-35100	BRACKET ASSY,LO FILT	1							
27	2	129006-35100	BRACKET ASSY, FILTER	1							
29	3	129417-35150	STUD, M20X67	1							
30	2	129508-35150	COLLAR, OIL-COOLER	1							
31	1	129150-35111	GASKET, BRACKET	1							
33	1	124085-35350	NUT, M20	1							
34	1	129006-44480	JOINT, R02	1							
35	1	129508-49030	HOSE ASSY, COOLER IN	1							
36	2	171008-03990	CLAMP, HOSE 18.5	1							
38	2	23080-015000	CLAMP, 15	1							
39	1	129006-49040	HOSE ASSY,COOLER OUT	1							
40	2	171008-03990	CLAMP, HOSE 18.5	1							
42	2	129642-49180	TUBE, CORRUGATED 19	1							
43	2	23080-015000	CLAMP, 15	1							
44	1	26106-080202	BOLT, M8X 20 PLATED	3							
45	1	129150-35170	FILTER ASSY, D80X80L	1							1

Remarks
(1)Spare parts.

N:Old $\xleftarrow[\text{No}]{\text{Yes}}$ New, Q:Old $\xleftarrow[\text{Yes}]{\text{No}}$ New, R:Old $\xleftarrow[\text{Yes}]{\text{Yes}}$ New, S:Old $\xleftarrow[\text{No}]{\text{No}}$ New, W:Add, Z:Discontinued, F:Interchangeable by set, K:Q'ty Change

Copyright (C) 2021 YANMAR GLOBAL CS CO., LTD. All RightsReserved.

Fig.12. LUB. OIL PIPE

(A)=3TNV86CT-MASV (D)=
(B)=3TN86CHT-MASV (E)=
(C)= (F)=

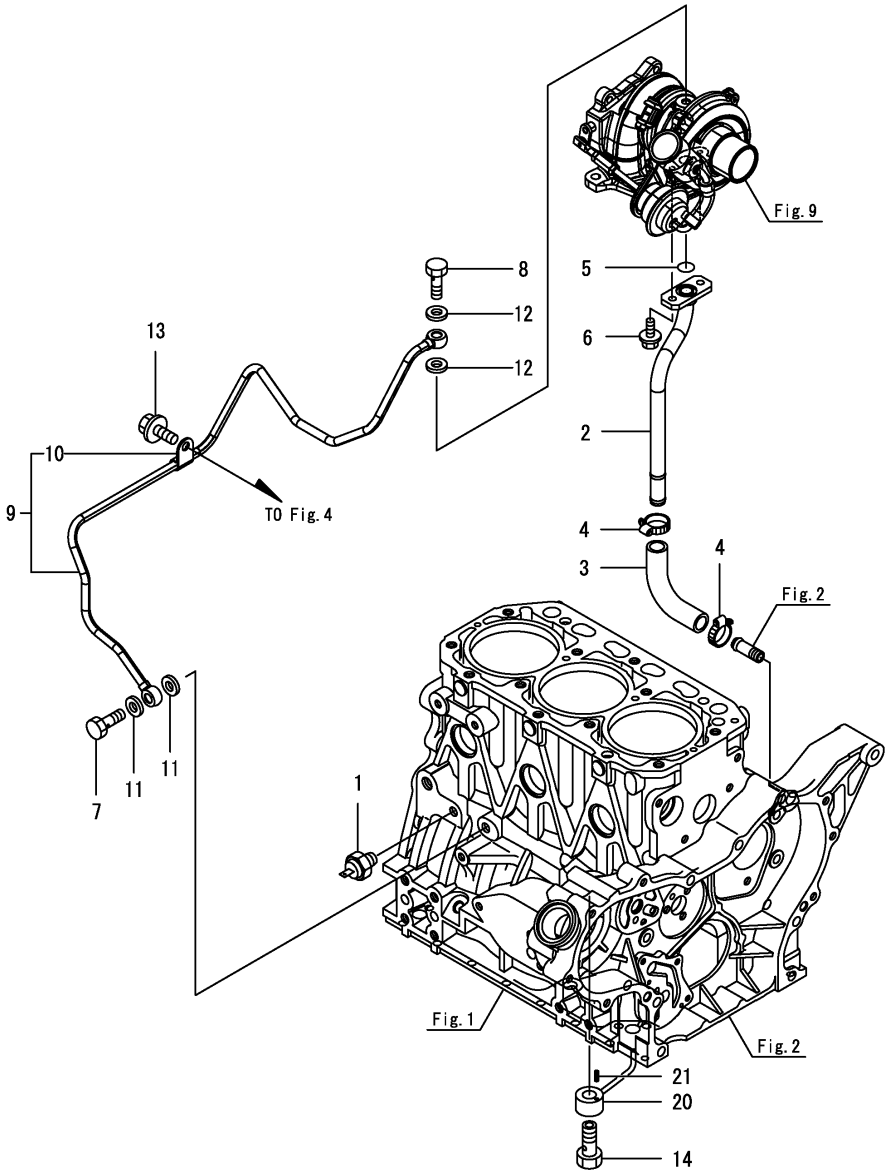

No.	Lev.	Parts No.	Description	Q'ty (A)	(B)	(C)	(D)	(E)	(F)	I	R
1	1	119761-39450	SWITCH, HYDRAULIC	1							
2	1	129A33-39610	PIPE, OIL RETURN	1							
3	1	129266-39620	JOINT, OIL PIPE	1							
4	1	23000-022000	CLAMP, 22	2							
5	1	24316-000160	O-RING, 4DP16.0	1							
6	1	26106-060162	BOLT, M6X 16 PLATED	2							
7	1	124160-39140	BOLT, PIPE JOINT M10	1							
8	1	121252-39150	BOLT, JOINT M10X1.5	1							
9	1	129A01-39460	PIPE ASSY, OIL	1							
10	2	124223-39900	RETAINER	1							
11	1	22190-100002	WASHER, SEAL 10	2							
12	1	23414-100000	GASKET, 10X1.0	2							
13	1	26106-080122	BOLT, M8X 12 PLATED	1							
14	1	129792-39410	VALVE ASSY, CHECK	3							
20	1	129553-39650	NOZZLE, COOLING	3							
21	1	22351-030010	PIN, SPRING 3.0X10	3							

N:Old $\frac{\text{Yes}}{\text{No}}$ New, Q:Old $\frac{\text{No}}{\text{Yes}}$ New, R:Old $\frac{\text{Yes}}{\text{Yes}}$ New, S:Old $\frac{\text{No}}{\text{No}}$ New, W:Add, Z:Discontinued, F:Interchangeable by set, K:Q'ty Change

Copyright (C) 2021 YANMAR GLOBAL CS CO., LTD. All RightsReserved.

Fig.13. COOLING WATER SYSTEM

(A)=3TNV86CT-MASV (D)=
(B)=3TN86CHT-MASV (E)=
(C)= (F)=

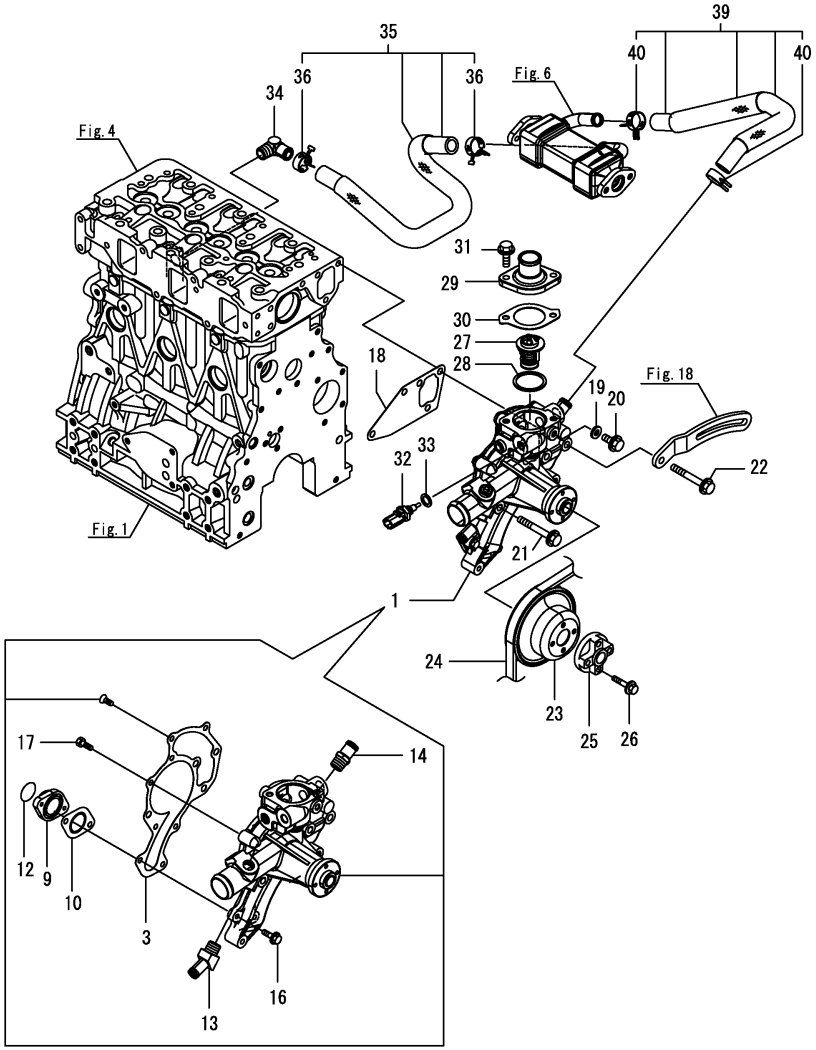

No.	Lev.	Parts No.	Description	Q'ty (A)	(B)	(C)	(D)	(E)	(F)	I	R
1	1	129A33-42002	PUMP ASSY, CW	1							
3	2	129150-42059	GASKET	1							
9	2	129150-42302	FLANGE, OUTLET	1							
10	2	129150-42319	GASKET, FLANGE	1							
12	2	129054-42320	O-RING	1							
13	2	129055-49300	ELBOW, R3/8	1							
14	2	129928-49420	JOINT	1							
16	2	26106-060202	BOLT, M6X 20 PLATED	2							
17	2	26116-060162	BOLT, M6X 16 PLATED	3							
18	1	129486-42050	GASKET, WATER PUMP	1							
19	1	23414-080000	GASKET, 8X1.0	1							
20	1	26106-080122	BOLT, M8X 12 PLATED	1							
21	1	26106-080552	BOLT, M8X 55 PLATED	3							
22	1	26106-080602	BOLT, M8X 60 PLATED	1							
23	1	129403-42380	V-PULLEY, PUMP	1							
24	1	129940-42290	V-BELT, A42.5	1							
25	1	121267-44760	SPACER, FAN 18MM	1							
26	1	26106-060302	BOLT, M6X 30 PLATED	4							
27	1	129457-49801	THERMOSTAT, 82C	1							
28	1	129150-49811	GASKET, THERMOSTAT	1							
29	1	129350-49530	COVER, THERMOSTAT	1							
30	1	129795-49551	GASKET, COVER	1							
31	1	26106-080222	BOLT, M8X 22 PLATED	2							
32	1	129927-44900	SENSOR, TEMPERATURE	1							1
33	1	22190-120002	WASHER, SEAL 12	1							
34	1	129051-49310	ELBOW, PT3/8	1							
35	1	129A23-49630	HOSE ASSY, WATER	1							
36	2	129960-03990	CLAMP, HOSE 19.8	2							
39	1	129A23-49640	HOSE, COOLER OUTLET	1							
40	2	129960-03990	CLAMP, HOSE 19.8	2							

Remarks
(1)When replacing this part, it is necessary to update the software of the ECU using the designated service tool.
Please refer to the Service Manual for details.

N:Old ←Yes/No→ New, Q:Old ←No/Yes→ New, R:Old ←Yes/Yes→ New, S:Old ←No/No→ New, W:Add, Z:Discontinued, F:Interchangeable by set, K:Q'ty Change

Copyright (C) 2021 YANMAR GLOBAL CS CO., LTD. All RightsReserved.

Fig.14. FUEL SUPPLY PUMP

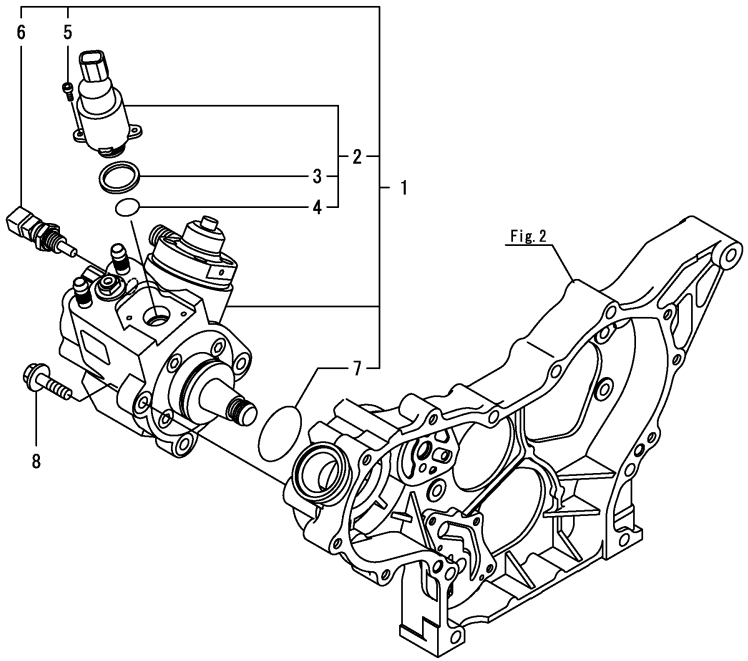

(A)=3TNV86CT-MASV (D)=
(B)=3TN86CHT-MASV (E)=
(C)= (F)=

No.	Lev.	Parts No.	Description	Q'ty (A)	(B)	(C)	(D)	(E)	(F)	I	R
1	1	129C28-51000	PUMP ASSY, FUEL	1							1
2	2	129A00-51100	VALVE ASSY	1							1
3	3	129A00-51110	RING, SEAL	1							
4	3	129A00-51120	O-RING, MPROP	1							
5	2	129A00-51130	BOLT, MPROP	2							
6	2	129A00-51200	SENSOR, TEMPERATURE	1							1
7	2	129A00-51900	O-RING, FUEL PUMP	1							
8	1	26106-080302	BOLT, M8X 30 PLATED	3							

Remarks
(1)When replacing this part, it is necessary to update the software of the ECU using the designated service tool.
Please refer to the Service Manual for details.

N:Old $\frac{\text{Yes}}{\text{No}}$ New, Q:Old $\frac{\text{No}}{\text{Yes}}$ New, R:Old $\frac{\text{Yes}}{\text{Yes}}$ New, S:Old $\frac{\text{No}}{\text{No}}$ New, W:Add, Z:Discontinued, F:Interchangeable by set, K:Q'ty Change

Copyright (C) 2021 YANMAR GLOBAL CS CO., LTD. All RightsReserved.

Fig.15. FUEL INJECTION VALVE

(A)=3TNV86CT-MASV (D)=
(B)=3TN86CHT-MASV (E)=
(C)= (F)=

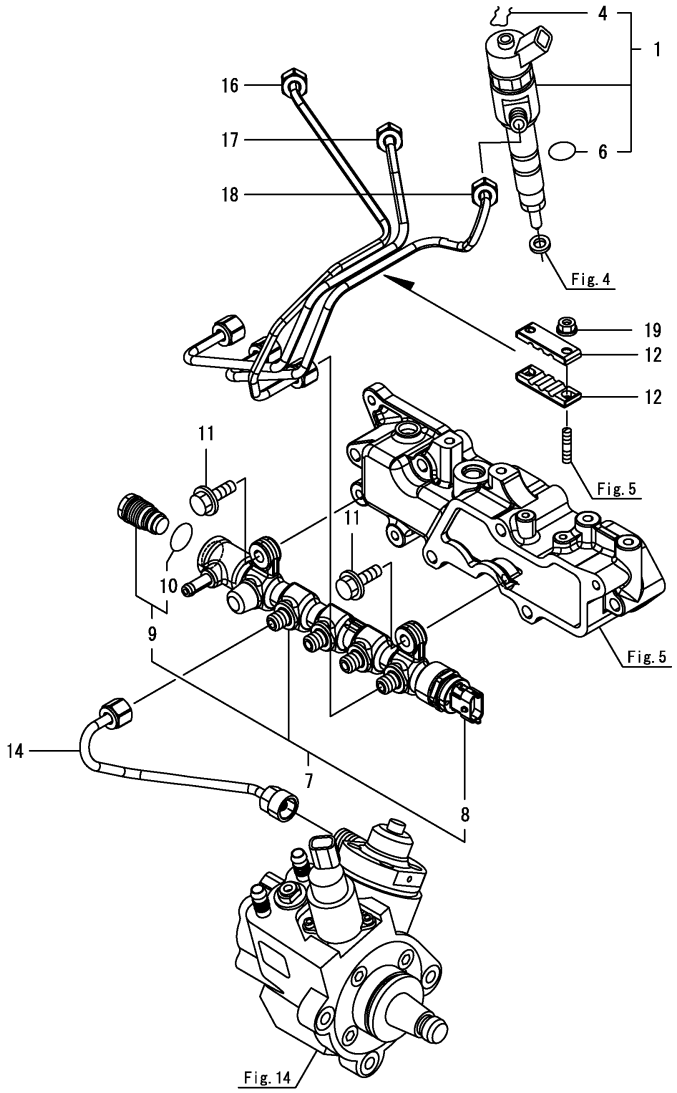

No.	Lev.	Parts No.	Description	Q'ty (A)	(B)	(C)	(D)	(E)	(F)	I	R
1	1	129A01-53100	INJECTOR, CR	3							1
4	2	129A00-53200	RING, RETAINING	3							
6	2	129C28-53300	O-RING	3							
7	1	129A00-57000	COMMON RAIL ASSY	1							1
8	2	129A00-57100	SENSOR, PRESSURE	1							1
9	2	129A00-57200	VALVE ASSY, PLV4	1							1
10	3	129A00-57210	O-RING, PLV4	1							
11	1	26106-080252	BOLT, M8X 25 PLATED	2							
12	1	123372-59100	RETAINER, PIPE	2							
14	1	129A00-59700	PIPE ASSY, RAIL IN	1							
16	1	129A00-59810	PIPE ASSY, INJECTION	1							
17	1	129A00-59820	PIPE ASSY, INJECTION	1							
18	1	129A00-59830	PIPE ASSY, INJECTION	1							
19	1	26366-060002	NUT, M6	2							

Remarks
(1)When replacing this part, it is necessary to update the software of the ECU using the designated service tool.
Please refer to the Service Manual for details.

N:Old $\overset{\text{Yes}}{\underset{\text{No}}{\leftrightarrow}}$ New, Q:Old $\overset{\text{No}}{\underset{\text{Yes}}{\leftrightarrow}}$ New, R:Old $\overset{\text{Yes}}{\underset{\text{Yes}}{\leftrightarrow}}$ New, S:Old $\overset{\text{No}}{\underset{\text{No}}{\leftrightarrow}}$ New, W:Add, Z:Discontinued, F:Interchangeable by set, K:Q'ty Change

Copyright (C) 2021 YANMAR GLOBAL CS CO., LTD. All RightsReserved.

Fig.16. FUEL PIPE

(A)=3TNV86CT-MASV (D)=
(B)=3TN86CHT-MASV (E)=
(C)= (F)=

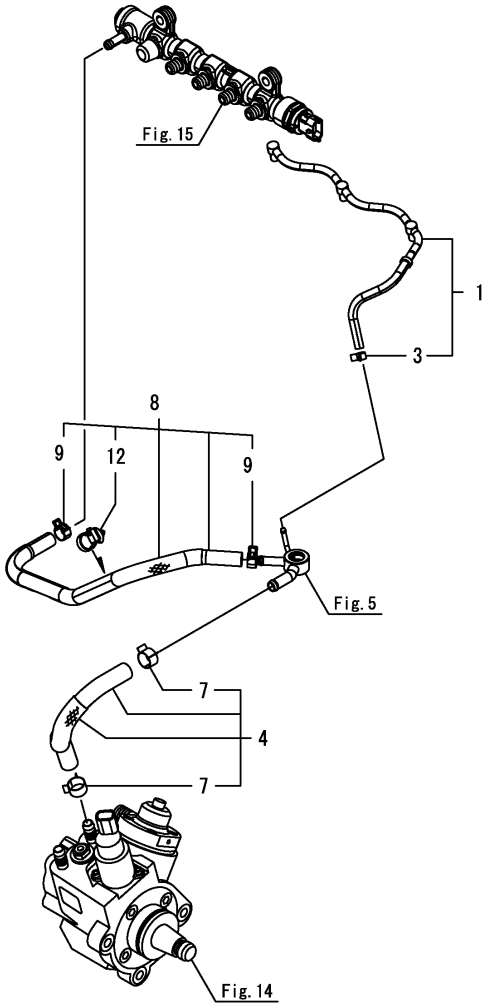

No.	Lev.	Parts No.	Description	Q'ty (A)	(B)	(C)	(D)	(E)	(F)	I	R
1	1	129A23-59500	PIPE ASSY, RETURN	1							
3	2	23080-007000	CLAMP, 7	1							
4	1	129A00-59020	PIPE ASSY, RETURN	1							
7	2	23080-015000	CLAMP, 15	2							
8	1	129A00-59030	PIPE ASSY, RETURN	1							
9	2	114270-59010	CLAMP, HOSE 12	2							
12	2	129A00-91200	CLIP, BAND	1							

N:Old $\xleftarrow[\text{No}]{\text{Yes}}$ New, Q:Old $\xleftarrow[\text{Yes}]{\text{No}}$ New, R:Old $\xleftarrow[\text{Yes}]{\text{Yes}}$ New, S:Old $\xleftarrow[\text{No}]{\text{No}}$ New, W:Add, Z:Discontinued, F:Interchangeable by set, K:Q'ty Change

Copyright (C) 2021 YANMAR GLOBAL CS CO., LTD. All RightsReserved.

Fig.17. STARTER MOTOR

(A)=3TNV86CT-MASV (D)=
(B)=3TN86CHT-MASV (E)=
(C)= (F)=

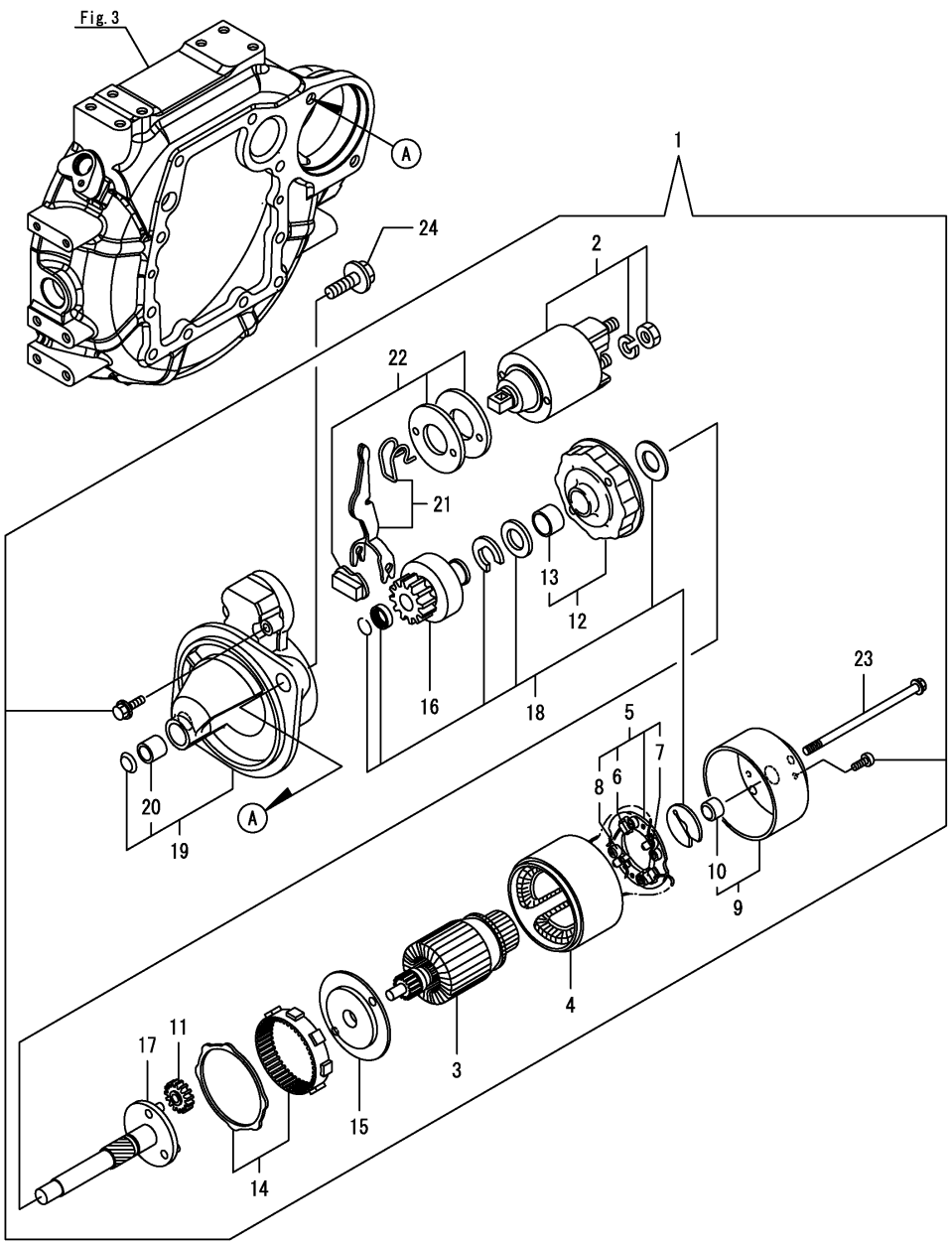

No.	Lev.	Parts No.	Description	Q'ty (A)	(B)	(C)	(D)	(E)	(F)	I	R
1	1	129242-77010	STARTER, 1.7	1							
2	2	129698-77030	SWITCH ASSY, MAGNET	1							
3	2	129242-77100	ARMATURE ASSY	1							
4	2	129242-77110	YOKE ASSY	1							
5	2	129242-77120	HOLDER ASSY, BRUSH	1							
6	3	129242-77130	BRUSH, -	2							
7	3	129242-77140	BRUSH SET	1							
8	3	129242-77150	SPRING, BRUSH	4							
9	2	129242-77160	COVER ASSY, STARTER	1							
10	3	129242-77170	METAL, REAR COVER	1							
11	2	118400-77230	GEAR, PLANET	3							
12	2	129242-77180	BRACKET, CENTER P	1							
13	3	129698-77190	BRACKET, CENTER	1							
14	2	129698-77200	GEAR, INTERNAL	1							
15	2	129242-77210	BRACKET, CENTER A	1							
16	2	129698-77220	PINION ASSY	1							
17	2	129698-77230	SHAFT, PINION	1							
18	2	129698-77250	WASHER SET	1							
19	2	129242-77260	CASE ASSY, GEAR	1							
20	3	X2114535200	METAL, STARTER	1							
21	2	129242-77270	LEVER SET, SHIFT	1							
22	2	129242-77280	COVER KIT, DUST	1							
23	2	124195-77770	BOLT, THROUGH	2							
24	1	26106-120252	BOLT, M12X 25 PLATED	2							

N:Old $\overset{\text{Yes}}{\underset{\text{No}}{\leftrightarrow}}$ New, Q:Old $\overset{\text{No}}{\underset{\text{Yes}}{\leftrightarrow}}$ New, R:Old $\overset{\text{Yes}}{\underset{\text{Yes}}{\leftrightarrow}}$ New, S:Old $\overset{\text{No}}{\underset{\text{No}}{\leftrightarrow}}$ New, W:Add, Z:Discontinued, F:Interchangeable by set, K:Q'ty Change

Copyright (C) 2021 YANMAR GLOBAL CS CO., LTD. All RightsReserved.

Fig.18. GENERATOR

(A)=3TNV86CT-MASV (D)=
(B)=3TN86CHT-MASV (E)=
(C)= (F)=

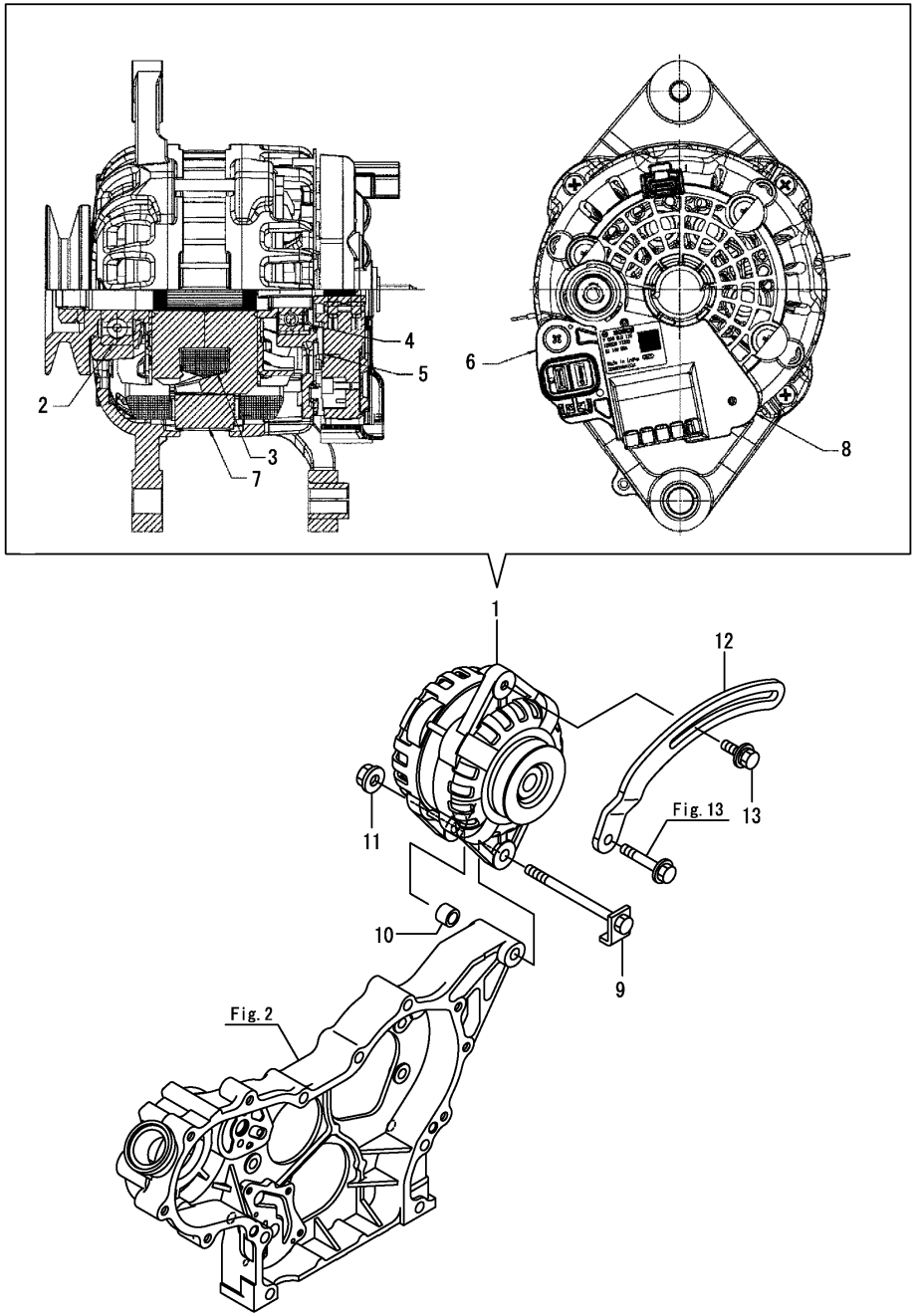

No.	Lev.	Parts No.	Description	Q'ty (A)	(B)	(C)	(D)	(E)	(F)	I	R
1	1	129908-77200	ALTERNATOR,	1							
2	2	129908-77710	BEARING, BALL FR	1							
3	2	129908-77720	ROTOR	1							
4	2	129908-77730	BEARING, BALL RR	1							
5	2	129908-77740	RECTIFIER	1							
6	2	129908-77750	REGULATOR	1							
7	2	129908-77760	STATOR	1							
8	2	129908-77770	PROTECTOR	1							
9	1	129908-77220	BOLT, STOPPER M10	1							
10	1	129A20-77350	PIECE, DISTANCE	1							
11	1	26306-100002	NUT, M10	1							
12	1	119440-77300	ADJUSTER, BELT	1							
13	1	119810-77340	BOLT, ADJUSTER L=30	1							

N:Old $\xleftarrow[\text{No}]{\text{Yes}}$ New, Q:Old $\xleftarrow[\text{Yes}]{\text{No}}$ New, R:Old $\xleftarrow[\text{Yes}]{\text{Yes}}$ New, S:Old $\xleftarrow[\text{No}]{\text{No}}$ New, W:Add, Z:Discontinued, F:Interchangeable by set, K:Q'ty Change

Copyright (C) 2021 YANMAR GLOBAL CS CO., LTD. All RightsReserved.

Fig.19. ELECTRONIC CONTROL UNIT(ECU)

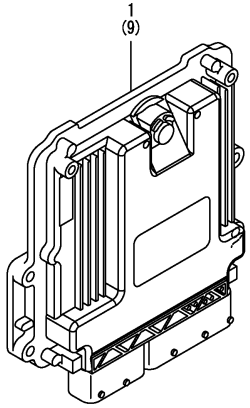

Remarks
(1)Eco ECU
This part cannot be ordered.
Replace the part using a Service ECU with the proper engine information installed.
(2)Service ECU
If the proper information is not installed, the engine will not operate.
To install proper information, go to an authorized distributor.

(A)=3TNV86CT-MASV (D)=
(B)=3TN86CHT-MASV (E)=
(C)= (F)=

No.	Lev.	Parts No.	Description	Q'ty (A)	(B)	(C)	(D)	(E)	(F)	I	R
1	1	129A32-75070	ECU ASSY,3-86CT-MASV	1							1
9	1	129A00-75910	ECU ASSY,SERVICE YMR	1							2

N:Old $\xleftarrow[\text{No}]{\text{Yes}}$ New, Q:Old $\xleftarrow[\text{Yes}]{\text{No}}$ New, R:Old $\xleftarrow[\text{Yes}]{\text{Yes}}$ New, S:Old $\xleftarrow[\text{No}]{\text{No}}$ New, W:Add, Z:Discontinued, F:Interchangeable by set, K:Q'ty Change

Copyright (C) 2021 YANMAR GLOBAL CS CO., LTD. All RightsReserved.

Fig.20. ELECTRIC PARTS

(A)=3TNV86CT-MASV
(B)=3TN86CHT-MASV
(C)=
(D)=
(E)=
(F)=

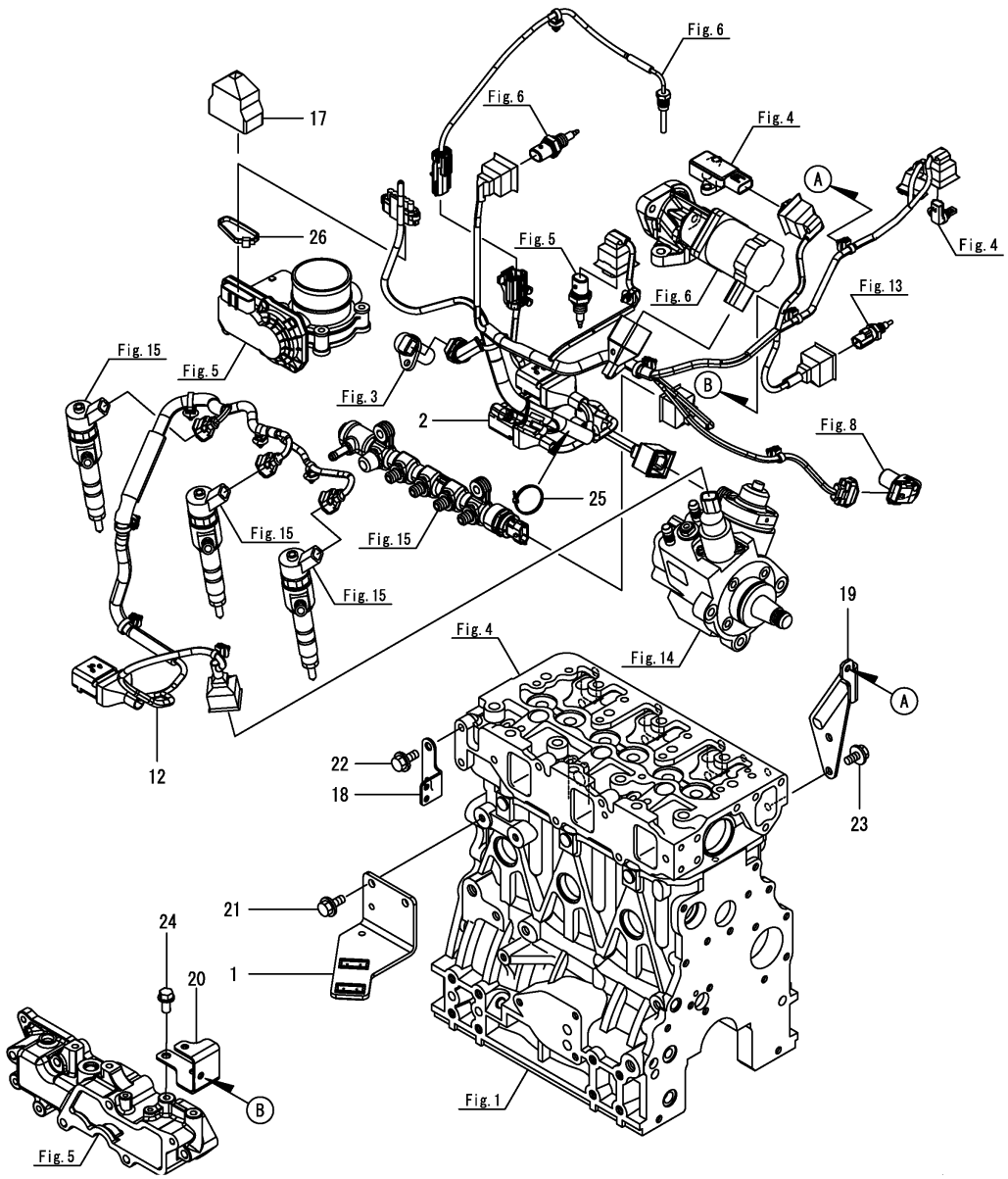

No.	Lev.	Parts No.	Description	Q'ty (A)	(B)	(C)	(D)	(E)	(F)	I	R
1	1	129A24-77940	BRACKET, CONNECTOR	1							
2	1	129A32-91220	HARNESS,B ECO ENGINE	1							
12	1	129A00-91231	HARNESS, C T4	1							
17	1	129A00-91451	BOOT, CAP TYPE	1							
18	1	129A00-91600	BRACKET, HARNESS	1							
19	1	129A72-91600	BRACKET, HARNESS	1							
20	1	129A72-91610	BRACKET, HARNESS	1							
21	1	26106-080142	BOLT, M8X 14 PLATED	2							
22	1	26106-080122	BOLT, M8X 12 PLATED	2							
23	1	26106-080122	BOLT, M8X 12 PLATED	2							
24	1	26106-080162	BOLT, M8X 16 PLATED	2							
25	1	29621-100000	BAND, TR100	1							
26	1	29621-200000	BAND	1							

N:Old $\xleftarrow[\text{No}]{\text{Yes}}$ New, Q:Old $\xleftarrow[\text{Yes}]{\text{No}}$ New, R:Old $\xleftarrow[\text{Yes}]{\text{Yes}}$ New, S:Old $\xleftarrow[\text{No}]{\text{No}}$ New, W:Add, Z:Discontinued, F:Interchangeable by set, K:Q'ty Change

Copyright (C) 2021 YANMAR GLOBAL CS CO., LTD. All RightsReserved.

Fig.21. ACCESSORY

(A)=3TNV86CT-MASV (D)=
(B)=3TN86CHT-MASV (E)=
(C)= (F)=

No.	Lev.	Parts No.	Description	Q'ty (A)	(B)	(C)	(D)	(E)	(F)	I	R
1	1	129930-13201	GASKET, SILENCER	1							
2	1	172B02-17150	RELAY, CA TYPE C	1							

N:Old $\xleftrightarrow[\text{No}]{\text{Yes}}$ New, Q:Old $\xleftrightarrow[\text{Yes}]{\text{No}}$ New, R:Old $\xleftrightarrow[\text{Yes}]{\text{Yes}}$ New, S:Old $\xleftrightarrow[\text{No}]{\text{No}}$ New, W:Add, Z:Discontinued, F:Interchangeable by set, K:Q'ty Change

Copyright (C) 2021 YANMAR GLOBAL CS CO., LTD. All RightsReserved.

Fig.22. CYLINDER BLOCK

(A)=3TNV86CT-MASV (D)=
(B)=3TN86CHT-MASV (E)=
(C)= (F)=

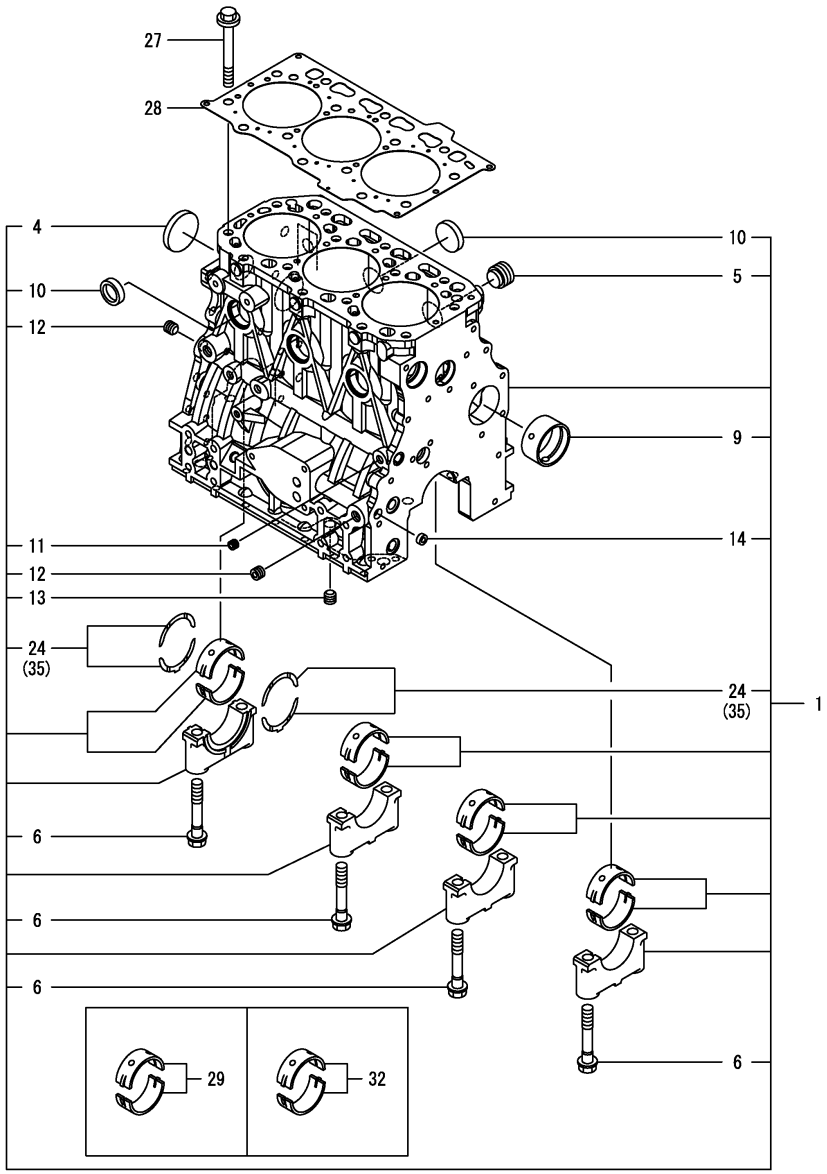

No.	Lev.	Parts No.	Description	Q'ty (A)	(B)	(C)	(D)	(E)	(F)	I	R
1	1	129A05-01150	BLOCK ASSY, CYLINDER		1						
4	2	129001-01250	PLUG, 50		1						
5	2	171051-01921	PLUG, NPTF1		1						
6	2	129150-02020	BOLT, METAL CAP		8						
9	2	129795-02412	BUSH, CAMSHAFT		1						
10	2	27241-300000	PLUG(30		6						
11	2	124060-01050	PLUG, PT1/8		1						
12	2	124160-01910	PLUG, PT1/4		2						
13	2	124160-01910	PLUG, PT1/4		1						
14	2	27241-120000	PLUG, 12		1						
24	2	129150-02931	METAL ASSY, THRUST		2						
27	1	129150-01200	BOLT, CYLINDER HEAD		14						
28	1	129A05-01330	GASKET ASSY, HEAD		1						
29	1	129C05-02810	BEARING ASSY, MAIN		4						1
32	1	129C05-02600	BEARING ASSY, MAIN		4						2
35	1	129150-02941	METAL ASSY, 0.25 OS		1						3

Remarks
(1)Spare parts.
(2)Under-sized(U.S.=0.25) parts.
(3)Over-sized(O.S.=0.25) parts.

N:Old ◄Yes/No► New, Q:Old ◄No/Yes► New, R:Old ◄Yes/Yes► New, S:Old ◄No/No► New, W:Add, Z:Discontinued, F:Interchangeable by set, K:Q'ty Change

Copyright (C) 2021 YANMAR GLOBAL CS CO., LTD. All RightsReserved.

Fig.23. GEAR HOUSING

(A)=3TNV86CT-MASV
(B)=3TN86CHT-MASV
(C)=
(D)=
(E)=
(F)=

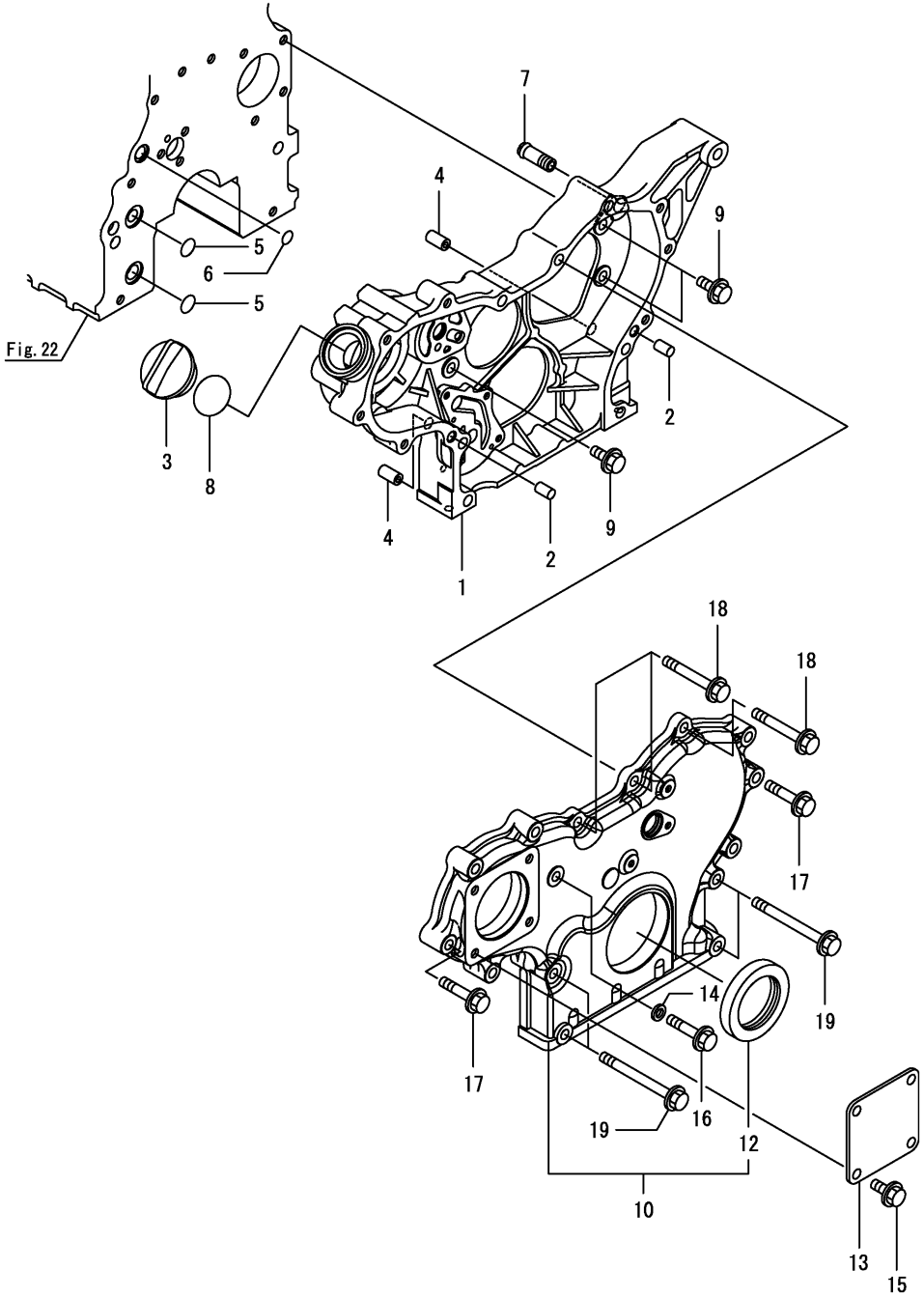

No.	Lev.	Parts No.	Description	Q'ty (A)	(B)	(C)	(D)	(E)	(F)	I	R
1	1	129A33-01500	CASE, GEAR		1						
2	1	129100-01580	PIN, PARALLEL 8X16		2						
3	1	124160-01751	CAP, FILLER		1						
4	1	129795-01950	PIPE, KNOCK L=18		2						
5	1	119609-32040	O-RING, P16		2						
6	1	119624-32040	O-RING, P12.0		1						
7	1	129122-44480	JOINT, PT1/4		1						
8	1	24311-000320	O-RING, 1AP32.0		1						
9	1	26106-080162	BOLT, M8X 16 PLATED		3						
10	1	129A00-01550	COVER ASSY, CASE		1						
12	2	119934-01800	SEAL, OIL		1						
13	1	124240-01871	COVER,HYDRAULIC PUMP		1						
14	1	22190-080002	WASHER, SEAL 8		1						
15	1	26106-080162	BOLT, M8X 16 PLATED		4						
16	1	26106-080352	BOLT, M8X 35 PLATED		1						
17	1	26106-080402	BOLT, M8X 40 PLATED		7						
18	1	26106-080602	BOLT, M8X 60 PLATED		3						
19	1	26106-080852	BOLT, M8X 85 PLATED		4						

N:Old $\overset{\text{Yes}}{\underset{\text{No}}{\leftrightarrows}}$ New, Q:Old $\overset{\text{No}}{\underset{\text{Yes}}{\leftrightarrows}}$ New, R:Old $\overset{\text{Yes}}{\underset{\text{Yes}}{\leftrightarrows}}$ New, S:Old $\overset{\text{No}}{\underset{\text{No}}{\leftrightarrows}}$ New, W:Add, Z:Discontinued, F:Interchangeable by set, K:Q'ty Change

Copyright (C) 2021 YANMAR GLOBAL CS CO., LTD. All RightsReserved.

Fig.24. FLYWHEEL HOUSING & OIL SUMP

(A)=3TNV86CT-MASV (D)=
(B)=3TN86CHT-MASV (E)=
(C)= (F)=

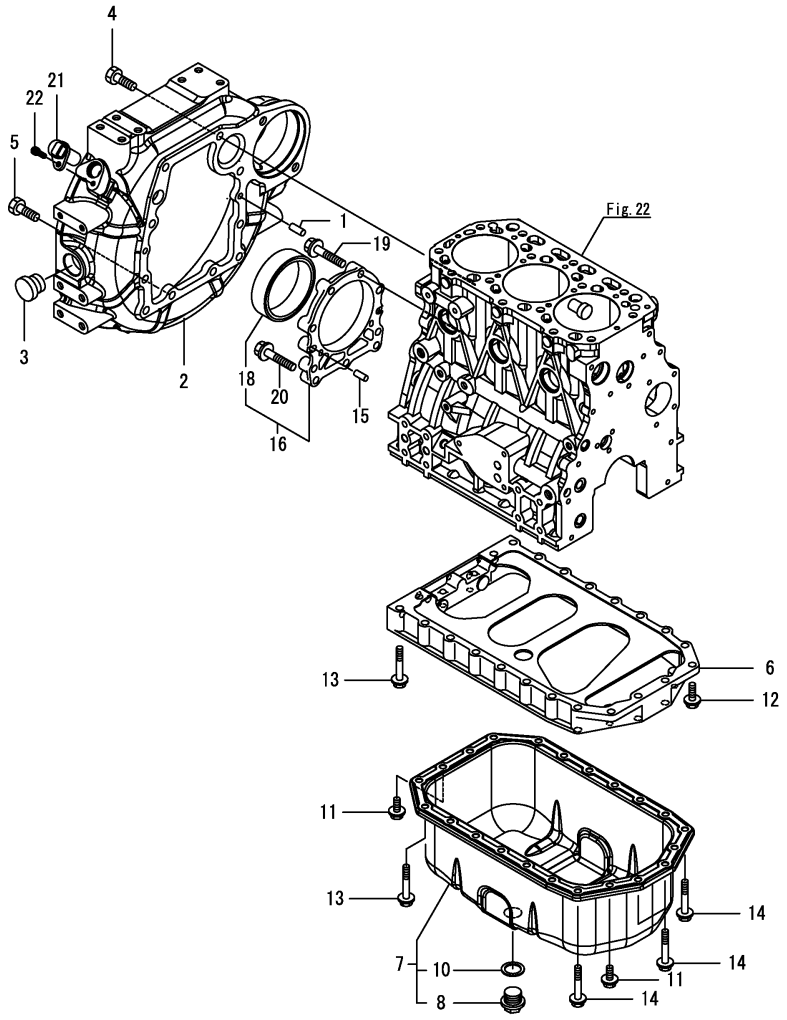

No.	Lev.	Parts No.	Description	Q'ty (A)	(B)	(C)	(D)	(E)	(F)	I	R
1	1	129100-01580	PIN, PARALLEL 8X16		2						
2	1	129A00-01602	HOUSING, FLYWHEEL		1						
3	1	119620-01750	CAP, WHEEL COVER		1						
4	1	26206-100252	BOLT, M10X 25 PLATED		6						
5	1	26206-100302	BOLT, M10X 30 PLATED		4						
6	1	129100-01730	SPACER, OIL PAN		1						
7	1	129136-01780	OIL PAN ASSY		1						
8	2	119640-01640	PLUG, DRAIN M22		1						
10	2	22190-220002	WASHER, SEAL 22		1						
11	1	26106-080162	BOLT, M8X 16 PLATED		4						
12	1	26106-080252	BOLT, M8X 25 PLATED		2						
13	1	26106-080452	BOLT, M8X 45 PLATED		16						
14	1	26106-080502	BOLT, M8X 50 PLATED		4						
15	1	129100-01580	PIN, PARALLEL 8X16		2						
16	1	129648-01600	CASE ASSY, OIL SEAL		1						
18	2	129648-01780	SEAL, OIL		1						
19	1	129486-01670	BOLT, M8X30		6						
20	1	26106-080352	BOLT, M8X 35 PLATED		3						
21	1	129A00-21710	SENSOR, FLYWHEEL		1						1
22	1	26450-060162	BOLT, M6X 16		1						

Remarks
(1)When replacing this part, it is necessary to update the software of the ECU using the designated service tool.
Please refer to the Service Manual for details.

N:Old $\overset{\text{Yes}}{\underset{\text{No}}{\leftrightarrow}}$ New, Q:Old $\overset{\text{No}}{\underset{\text{Yes}}{\leftrightarrow}}$ New, R:Old $\overset{\text{Yes}}{\underset{\text{Yes}}{\leftrightarrow}}$ New, S:Old $\overset{\text{No}}{\underset{\text{No}}{\leftrightarrow}}$ New, W:Add, Z:Discontinued, F:Interchangeable by set, K:Q'ty Change

Copyright (C) 2021 YANMAR GLOBAL CS CO., LTD. All RightsReserved.

Fig.25. CYLINDER HEAD & BONNET

(A)=3TNV86CT-MASV (D)=
(B)=3TN86CHT-MASV (E)=
(C)= (F)=

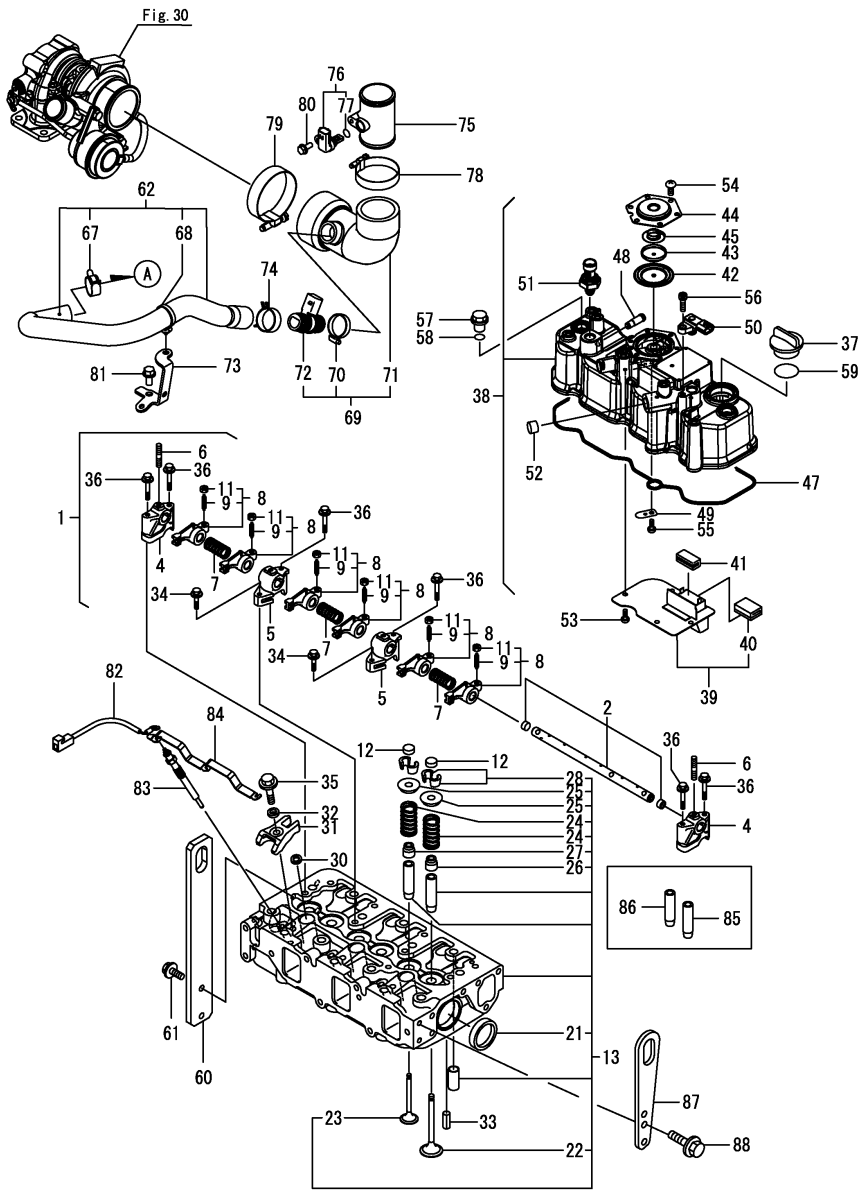

No.	Lev.	Parts No.	Description	Q'ty (A)	(B)	(C)	(D)	(E)	(F)	I	R
1	1	129004-11241	SHAFT ASSY, ROCKER		1						
2	2	129004-11251	SHAFT, ROCKER ARM		1						
4	2	119802-11260	SUPPORT, ROCKER ARM		2						
5	2	119802-11270	SUPPORT, ROCKER ARM		2						
6	2	119802-11280	BOLT, STUD		3						
7	2	129150-11280	SPRING, SHAFT		3						
8	2	129004-11650	ARM ASSY, ROCKER		6						
9	3	129150-11230	SCREW, VALVE ADJUST		6						
11	3	129150-11750	NUT, M8XP1.0		6						
12	1	129150-11370	CAP, VALVE		6						
13	1	129A05-11700	HEAD ASSY, CYLINDER		1						
21	2	27241-400000	PLUG, 40		2						
22	2	129C05-11100	VALVE, SUCTION		3						
23	2	129100-11112	VALVE, EXHAUST		3						
24	2	129795-11120	SPRING, VALVE		6						
25	2	129795-11180	RETAINER, SPRING		6						
26	2	124460-11340	SEAL, VALVE STEM		3						
27	2	129A00-11340	SEAL, VALVE STEM		3						
28	2	27310-080001	COTTER, 8		6						
30	1	129978-11871	GASKET, INJECTOR		3						
31	1	129A00-11900	RETAINER, INJECTOR		3						
32	1	120270-54410	WASHER, INJECTOR		3						
33	1	22351-060012	PIN, SPRING 6.0X12		2						
34	1	26106-080252	BOLT, M8X 25 PLATED		2						
35	1	26106-080352	BOLT, M8X 35 PLATED		3						
36	1	26106-080502	BOLT, M8X 50 PLATED		6						
37	1	124160-01751	CAP, FILLER		1						
38	1	129A05-11351	BONNET ASSY		1						
39	2	129004-03010	PLATE, BAFFLE		1						
40	3	119802-03070	BAFFLE, BREATHER		1						
41	2	129150-03070	BAFFLE, BREATHER		1						
42	2	123907-03100	DIAPHRAGM, BREATHER		1						
43	2	123907-03110	PLATE, CENTER		1						
44	2	123907-03120	PLATE, BREATHER		1						
45	2	123907-03140	SPRING, DIAPHRAGM		1						
47	2	129A00-11310	GASKET, BONNET		1						
48	2	129A00-11330	JOINT		1						
49	2	129009-11340	SPRING, PLATE		1						
50	2	129C05-12700	SENSOR, INT PRESSURE		1						1
51	2	129C05-13700	SENSOR, EXH PRESSURE		1						
52	2	119640-61400	PLUG		1						
53	2	22857-500100	SCREW, 5X10		4						
54	2	22857-500100	SCREW, 5X10		6						
55	2	22857-500100	SCREW, 5X10		1						
56	2	26450-060162	BOLT, M6X 16		1						
57	1	124160-11360	KNOB, BONNET		3						
58	1	24311-000120	O-RING, 1AP12.0		3						
59	1	24311-000320	O-RING, 1AP32.0		1						
60	1	129944-07910	LIFTER		1						
61	1	26106-080162	BOLT, M8X 16 PLATED		2						
62	1	129A72-03100	HOSE ASSY, BREATHER		1						

Remarks
(1)When replacing this part, it is necessary to update the software of the ECU using the designated service tool.
Please refer to the Service Manual for details.
(2)Spare parts.

N:Old $\overset{\text{Yes}}{\underset{\text{No}}{\leftrightarrow}}$ New, Q:Old $\overset{\text{No}}{\underset{\text{Yes}}{\leftrightarrow}}$ New, R:Old $\overset{\text{Yes}}{\underset{\text{Yes}}{\leftrightarrow}}$ New, S:Old $\overset{\text{No}}{\underset{\text{No}}{\leftrightarrow}}$ New, W:Add, Z:Discontinued, F:Interchangeable by set, K:Q'ty Change

++ CONTINUE ++

Copyright (C) 2021 YANMAR GLOBAL CS CO., LTD. All RightsReserved.

Fig.25. CYLINDER HEAD & BONNET

(A)=3TNV86CT-MASV
(B)=3TN86CHT-MASV
(C)=
(D)=
(E)=
(F)=

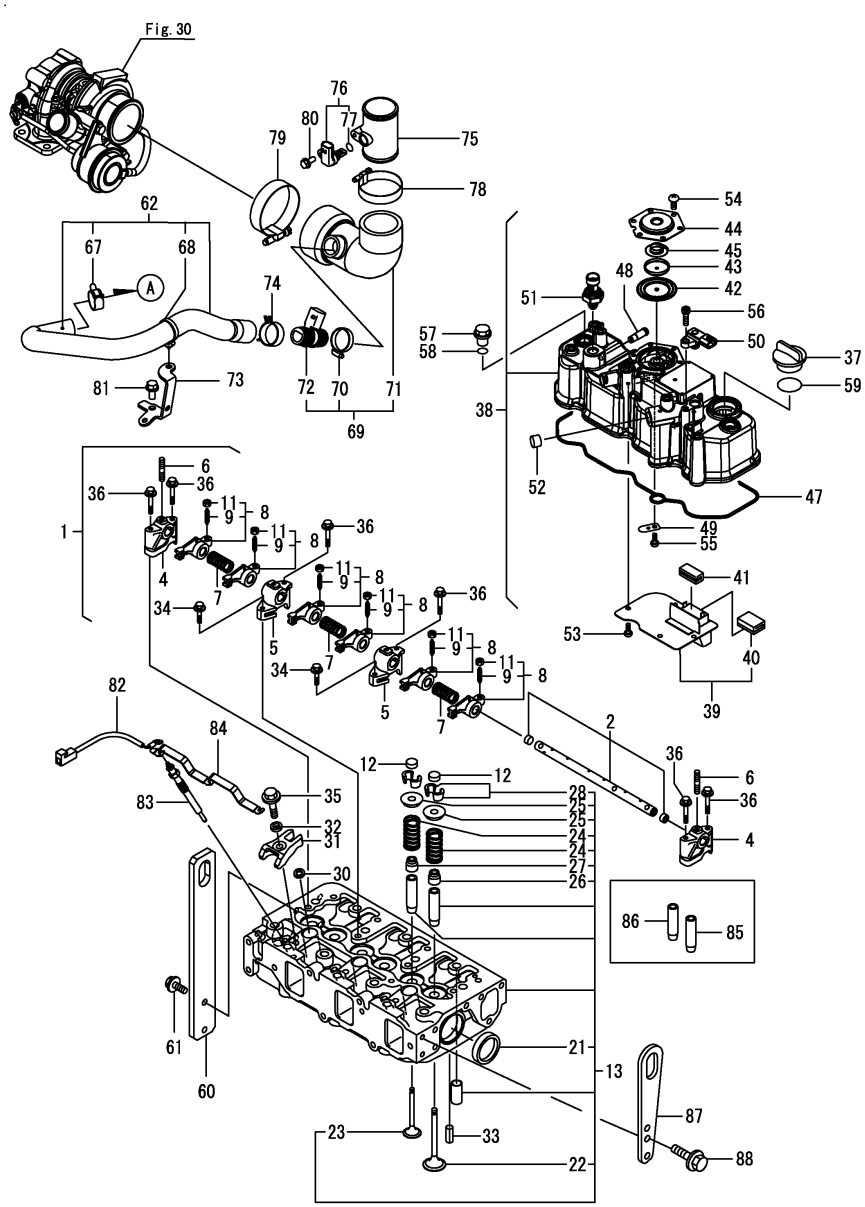

No.	Lev.	Parts No.	Description	Q'ty (A)	(B)	(C)	(D)	(E)	(F)	I	R
67	2	129410-03990	CLAMP, HOSE 21.5		1						
68	2	129A00-91200	CLIP, BAND		1						
69	1	129A72-03120	JOINT ASSY, 3-WAY		1						
70	2	129978-03280	CLIP, HOSE 35.0		1						
71	2	129A72-03350	JOINT, BREATHER		1						
72	2	129A01-77310	HEATER, PIPE		1						
73	1	129A72-03130	STAY, BREATHER HOSE		1						
74	1	129978-03270	CLIP, HOSE 26.0		1						
75	1	129978-03380	JOINT, BREATHER		1						
76	1	129A00-12711	SENSOR, TEMPERATURE		1						
77	2	129A00-12790	O-RING, TEMP SENSOR		1						
78	1	23000-070000	CLAMP, 70		1						
79	1	23000-080000	CLAMP, 80		1						
80	1	26106-060142	BOLT, M6X 14 PLATED		1						
81	1	26106-080162	BOLT, M8X 16 PLATED		1						
82	1	119803-77830	HARNESS, WIRE		1						
83	1	129008-77800	PLUG, GLOW		3						
84	1	129A00-77820	CONNECTOR, GLOW PLUG		1						
85	1	120130-11860	GUIDE, VALVE		3						2
86	1	129150-11810	GUIDE, VALVE		3						2
87	1	129900-07900	LIFTER, ENGINE		1						
88	1	26106-080162	BOLT, M8X 16 PLATED		2						

Remarks
(1)When replacing this part, it is necessary to update the software of the ECU using the designated service tool.
Please refer to the Service Manual for details.
(2)Spare parts.

N:Old $\xleftarrow[\text{No}]{\text{Yes}}$ New, Q:Old $\xleftarrow[\text{Yes}]{\text{No}}$ New, R:Old $\xleftarrow[\text{Yes}]{\text{Yes}}$ New, S:Old $\xleftarrow[\text{No}]{\text{No}}$ New, W:Add, Z:Discontinued, F:Interchangeable by set, K:Q'ty Change

Copyright (C) 2021 YANMAR GLOBAL CS CO., LTD. All RightsReserved.

Fig.26. SUCTION MANIFOLD

(A)=3TNV86CT-MASV
(B)=3TN86CHT-MASV
(C)=
(D)=
(E)=
(F)=

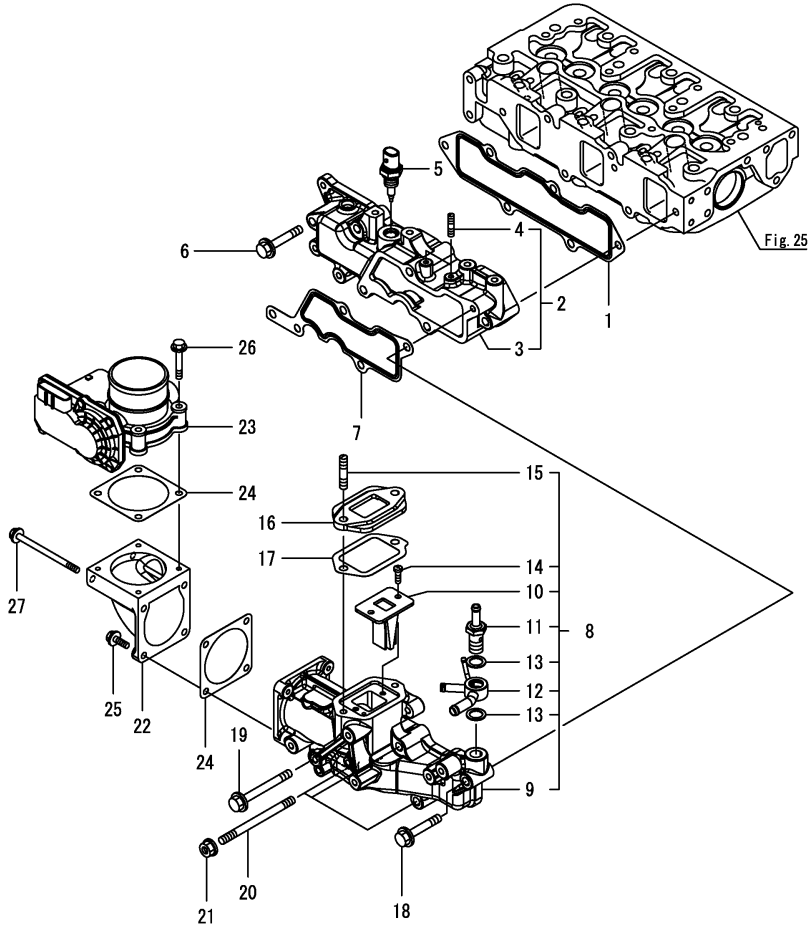

No.	Lev.	Parts No.	Description	Q'ty (A)	(B)	(C)	(D)	(E)	(F)	I	R
1	1	129A00-12110	GASKET, MANIFOLD		1						
2	1	129A01-12150	MANIFOLD ASSY,INTAKE		1						
3	2	129A01-12100	MANIFOLD, INTAKE		1						
4	2	26216-060202	STUD, M6X 20		2						
5	1	129A00-12721	SENSOR,AIR TEMP		1						1
6	1	26106-080502	BOLT, M8X 50 PLATED		3						
7	1	129A00-12810	GASKET, COLLECTOR		1						
8	1	129A01-12851	COLLECTOR ASSY		1						
9	2	129A01-12800	COLLECTOR, INTAKE		1						
10	2	129C01-13700	VALVE, REED		1						
11	2	129A00-59110	JOINT, HOSE M14		1						
12	2	129A00-59120	JOINT, HOSE 14		1						
13	2	22190-140002	WASHER, SEAL 14		2						
14	2	22857-500160	SCREW, 5X16		2						
15	2	26216-080352	STUD, M8X 35		2						
16	1	129A00-13710	SPACER, EGR VALVE		1						
17	1	129A00-13720	GASKET, EGR-V SPACER		1						
18	1	26106-080502	BOLT, M8X 50 PLATED		1						
19	1	26106-080752	BOLT, M8X 75 PLATED		1						
20	1	26216-081052	STUD, M8X105		3						
21	1	26306-080002	NUT, M8		3						
22	1	129A00-12820	BEND, INTAKE		1						
23	1	129A00-12900	THROTTLE, INTAKE		1						1
24	1	129A00-12910	GASKET, THROTTLE		2						
25	1	26106-060202	BOLT, M6X 20 PLATED		2						
26	1	26106-060402	BOLT, M6X 40 PLATED		4						
27	1	26106-060902	BOLT, M6X 90 PLATED		2						

Remarks
(1)When replacing this part, it is necessary to update the software of the ECU using the designated service tool.
Please refer to the Service Manual for details.

N:Old $\xleftrightarrow[\text{No}]{\text{Yes}}$ New, Q:Old $\xleftrightarrow[\text{Yes}]{\text{No}}$ New, R:Old $\xleftrightarrow[\text{Yes}]{\text{Yes}}$ New, S:Old $\xleftrightarrow[\text{No}]{\text{No}}$ New, W:Add, Z:Discontinued, F:Interchangeable by set, K:Q'ty Change

Copyright (C) 2021 YANMAR GLOBAL CS CO., LTD. All RightsReserved.

Fig.27. EXHAUST MANIFOLD

(A)=3TNV86CT-MASV (D)=
(B)=3TN86CHT-MASV (E)=
(C)= (F)=

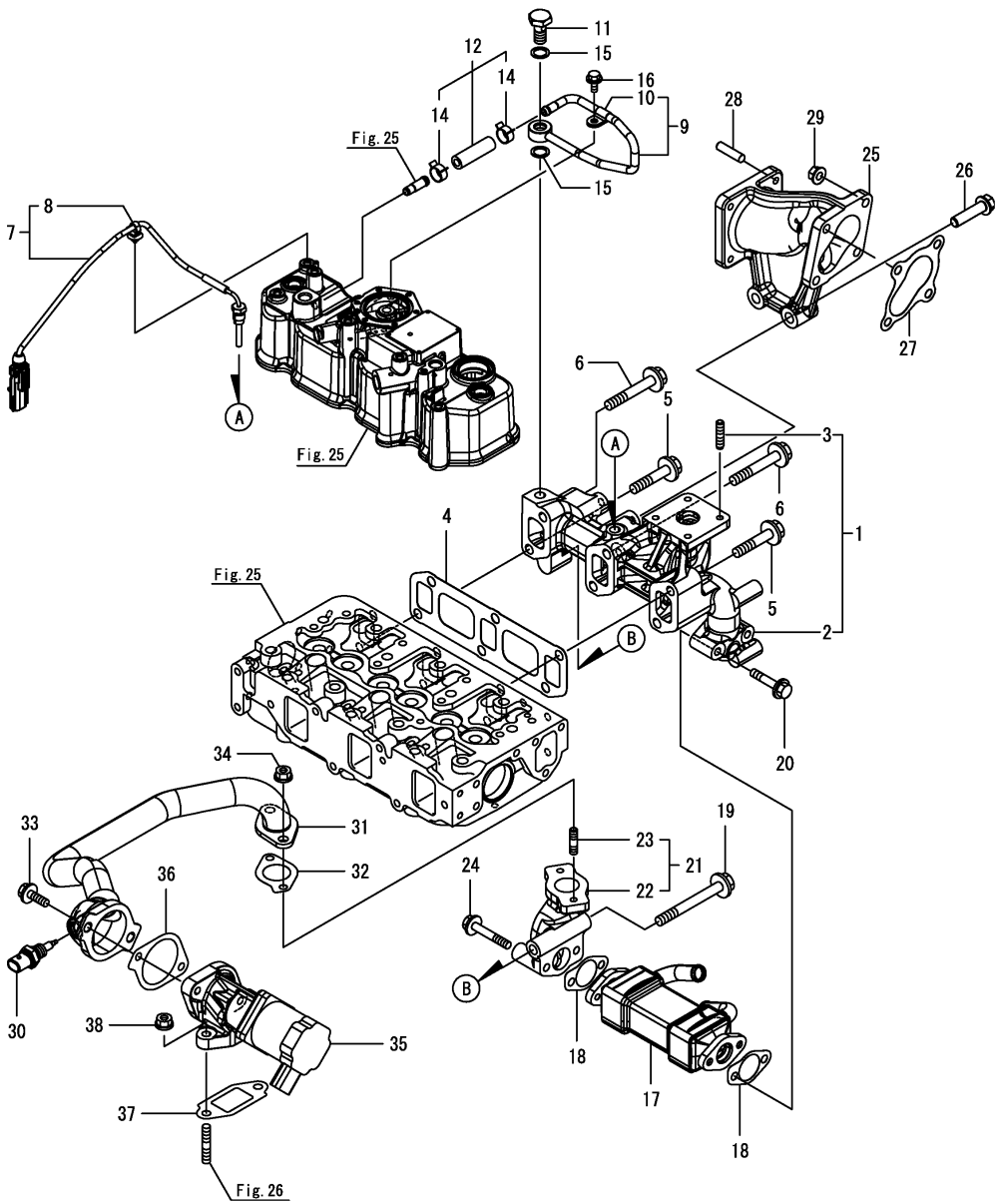

No.	Lev.	Parts No.	Description	Q'ty (A)	(B)	(C)	(D)	(E)	(F)	I	R
1	1	129A05-13100	MANIFOLD, EXHAUST		1						
2	2	129A05-13110	MANIFOLD, EXHAUST		1						
3	2	129C05-13120	STUD, M8X20		4						
4	1	129A00-13110	GASKET, MANIFOLD		1						
5	1	129A01-13601	BOLT, M10X50 10.9T		2						
6	1	129F01-13620	BOLT, M10X65 10.9T		4						
7	1	129A00-13770	SENSOR, TEMPERATURE		1						1
8	2	129A00-91200	CLIP, BAND		1						
9	1	129A05-13300	PIPE ASSY, PRESSURE		1						
10	2	23297-080061	CLAMP, A8X 6		1						
11	1	129A00-13350	BOLT, PIPE JOINT		1						
12	1	129A05-13360	HOSE ASSY, PRES EXH		1						
14	2	129A00-13380	CLIP, HOSE 14		2						
15	1	23414-120000	GASKET, 12X1.0		2						
16	1	26106-060122	BOLT, M6X 12 PLATED		1						
17	1	129A00-13400	COOLER, EGR		1						
18	1	129A00-13410	GASKET, EGR COOLER		2						
19	1	129F01-13600	BOLT, M10X90 10.9T		1						
20	1	129E00-13620	BOLT, M8X40 10.9		2						
21	1	129A00-13851	PIPE, EGR OUTLET		1						
22	2	129A00-13861	PIPE, EGR OUTLET		1						
23	2	129418-18320	STUD, M8X20		2						
24	1	26106-080502	BOLT, M8X 50 PLATED		2						
25	1	129A05-13430	PIPE, EXHAUST		1						
26	1	129F01-13650	BOLT, M10X40 10.9T		2						
27	1	129C05-18090	GASKET,TC OUT		1						
28	1	119131-18320	STUD, M8X22		4						
29	1	26306-080002	NUT, M8		4						
30	1	129A00-13752	SENSOR,EGR GAS TEMP		1						1
31	1	129A00-13800	PIPE, EGR		1						
32	1	129927-13810	GASKET, EGR PIPE		1						
33	1	26106-080252	BOLT, M8X 25 PLATED		2						
34	1	26306-080002	NUT, M8		2						
35	1	129A00-13901	VALVE, EGR		1						1
36	1	129A00-13910	GASKET, EGR-V INLET		1						
37	1	129A00-13920	GASKET, EGR-V OUTLET		1						
38	1	26306-080002	NUT, M8		2						

Remarks
(1)When replacing this part, it is necessary to update the software of the ECU using the designated service tool.
Please refer to the Service Manual for details.

N:Old $\xleftrightarrow[\text{No}]{\text{Yes}}$ New, Q:Old $\xleftrightarrow[\text{Yes}]{\text{No}}$ New, R:Old $\xleftrightarrow[\text{Yes}]{\text{Yes}}$ New, S:Old $\xleftrightarrow[\text{No}]{\text{No}}$ New, W:Add, Z:Discontinued, F:Interchangeable by set, K:Q'ty Change

Copyright (C) 2021 YANMAR GLOBAL CS CO., LTD. All RightsReserved.

Fig.28. DIESEL PARTICULATE FILTER(DPF)

(A)=3TNV86CT-MASV (D)=
(B)=3TN86CHT-MASV (E)=
(C)= (F)=

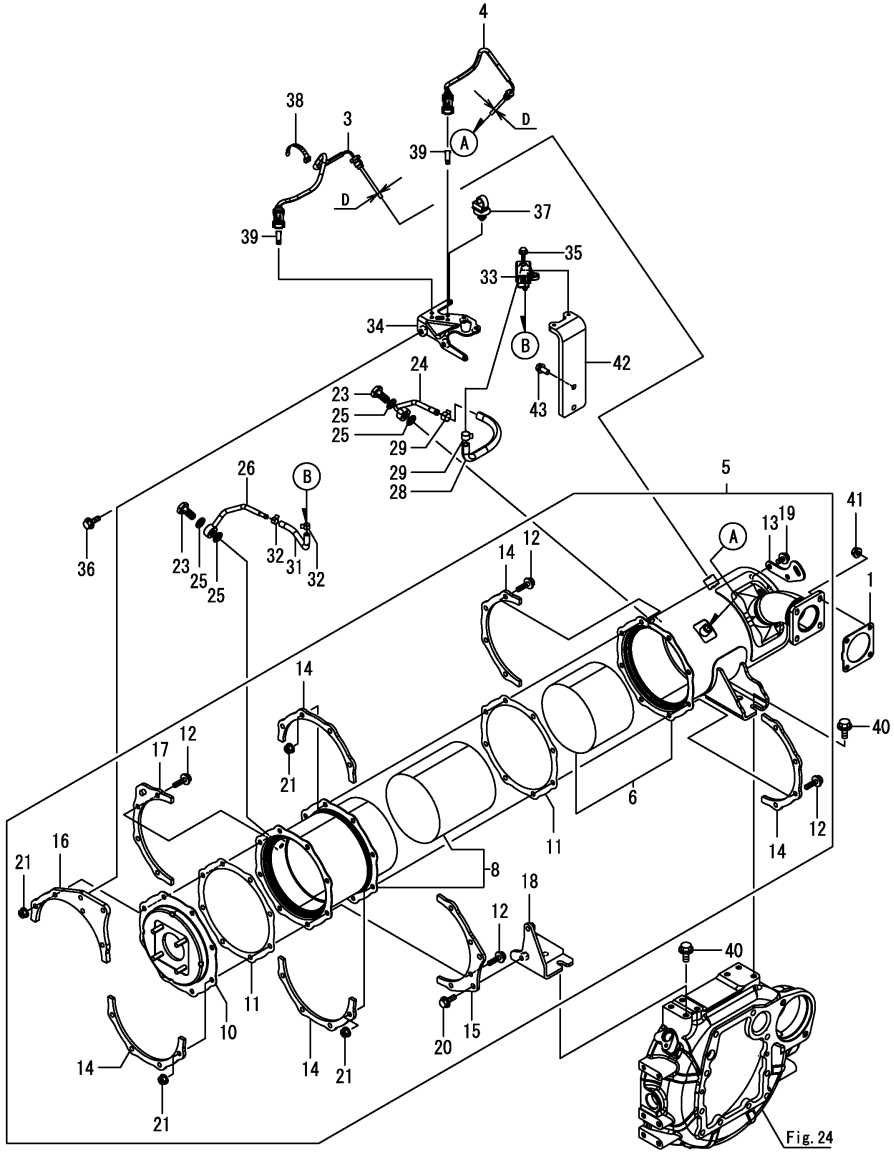

No.	Lev.	Parts No.	Description	Q'ty (A)	(B)	(C)	(D)	(E)	(F)	I	R
1	1	129930-13201	GASKET, SILENCER		1						
3	1	129C00-13860	SENSOR, ATD TEMP.DS+		1						1
4	1	129C00-13870	SENSOR, ATD TEMP.DS+		1						1
5	1	129A72-16000	DPF ASSY		1						1
6	2	129A01-16230	CASE, DOC		1						1
8	2	129A72-16400	CASE, SOOT FILTER		1						1
10	2	129A01-16550	FLANGE, OUTLET		1						
11	2	129A00-16600	GASKET, DPF		2						
12	2	129A00-16610	BOLT, M8X28 10.9T		16						
13	2	129C01-16690	LIFTER, DPF		1						
14	2	129A00-16700	STIFFENER, DPF A		5						
15	2	129A00-16710	STIFFENER, DPF B		1						
16	2	129A00-16730	STIFFENER, DPF C		1						
17	2	129A00-16740	STIFFENER, DPF C		1						
18	2	129C00-16801	STAY, DPF		1						
19	2	26106-080142	BOLT, M8X 14 PLATED		2						
20	2	26106-080222	BOLT, M8X 22 PLATED		2						
21	2	26306-080002	NUT, M8		16						
23	1	129A00-13350	BOLT, PIPE JOINT		2						
24	1	129A00-17300	PIPE, SENSOR		1						
25	1	129A00-17311	GASKET, SENSOR		4						
26	1	129A00-17350	PIPE, SENSOR		1						
28	1	129978-17500	HOSE,PRES EXH		1						
29	1	129A00-17520	CLIP, HOSE		2						
31	1	129C22-17610	HOSE, PRESSURE		1						
32	1	129A00-17570	CLIP, HOSE		2						
33	1	129978-17700	SENSOR, PRESSURE		1						1
34	1	129A00-17790	BRACKET, PRES SENSOR		1						
35	1	26106-060162	BOLT, M6X 16 PLATED		2						
36	1	26106-080202	BOLT, M8X 20 PLATED		2						
37	1	129A00-91200	CLIP, BAND		1						
38	1	129C00-91200	BAND		1						
39	1	129A00-91430	CLIP, CONNECTOR		2						
40	1	26106-100202	BOLT, M10X 20 PLATED		4						
41	1	26306-080002	NUT, M8		4						
42	1	129A88-17760	BRACKET, SENSOR		1						
43	1	26106-080202	BOLT, M8X 20 PLATED		2						

Remarks
(1)When replacing this part, it is necessary to update the software of the ECU using the designated service tool.
Please refer to the Service Manual for details.

N:Old $\overset{\text{Yes}}{\underset{\text{No}}{\leftrightarrow}}$ New, Q:Old $\overset{\text{No}}{\underset{\text{Yes}}{\leftrightarrow}}$ New, R:Old $\overset{\text{Yes}}{\underset{\text{Yes}}{\leftrightarrow}}$ New, S:Old $\overset{\text{No}}{\underset{\text{No}}{\leftrightarrow}}$ New, W:Add, Z:Discontinued, F:Interchangeable by set, K:Q'ty Change

Copyright (C) 2021 YANMAR GLOBAL CS CO., LTD. All RightsReserved.

Fig.29. CAMSHAFT & DRIVING GEAR

(A)=3TNV86CT-MASV (D)=
(B)=3TN86CHT-MASV (E)=
(C)= (F)=

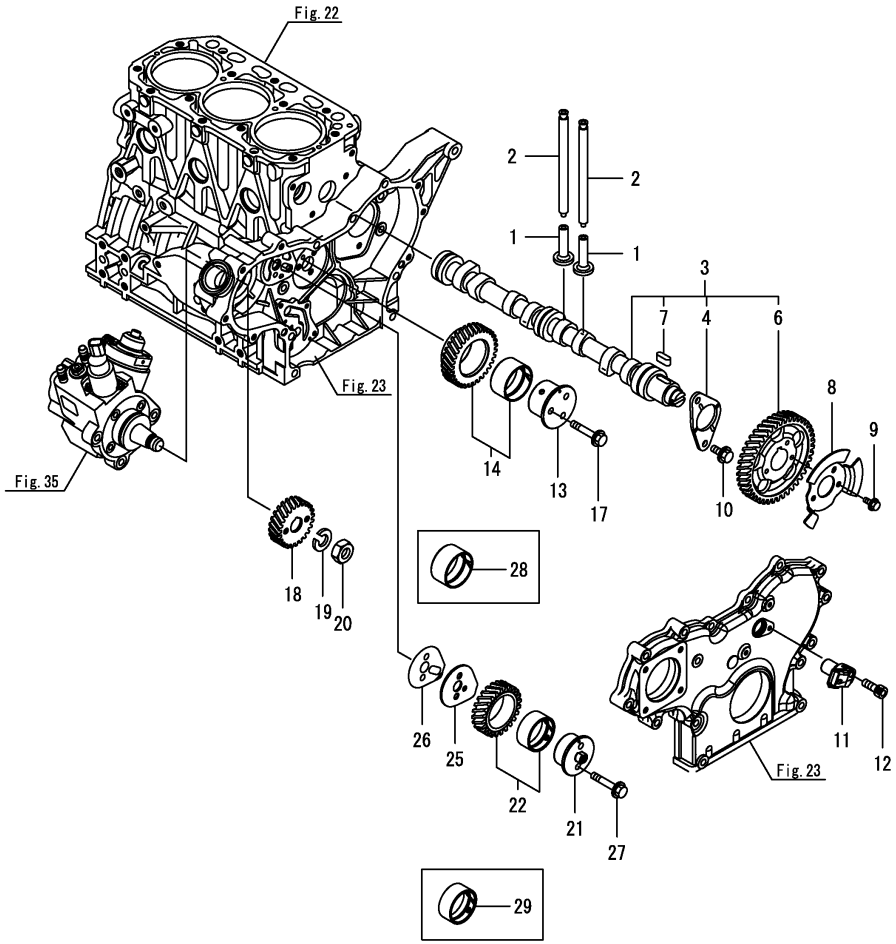

No.	Lev.	Parts No.	Description	Q'ty (A)	(B)	(C)	(D)	(E)	(F)	I	R
1	1	129150-14200	TAPPET		6						
2	1	129150-14400	ROD, PUSH L=178		6						
3	1	129A00-14580	CAMSHAFT ASSY		1						
4	2	129150-02450	METAL, THRUST		1						
6	2	129A00-14100	GEAR, CAMSHAFT		1						
7	2	22512-070140	KEY, 7X 14		1						
8	1	129A00-14701	PULSER, CAMSHAFT		1						
9	1	26106-060102	BOLT, M6X 10 PLATED		3						
10	1	26106-080142	BOLT, M8X 14 PLATED		2						
11	1	129A00-14710	SENSOR, ROTATION		1						
12	1	26450-060162	BOLT, M6X 16		1						
13	1	129A00-25050	SHAFT, IDLE GEAR A		1						
14	1	129A00-25110	GEAR ASSY, IDLE A		1						
17	1	26106-080452	BOLT, M8X 45 PLATED		3						
18	1	129A00-25900	GEAR, SUPPLY PUMP		1						
19	1	22217-180000	WASHER, SPRING 18		1						
20	1	26776-180002	NUT, LOCK M18		1						
21	1	129A00-25060	SHAFT, IDLE GEAR B		1						
22	1	129A00-25120	GEAR ASSY, IDLE B		1						
25	1	129A00-25200	PLATE, IDLE SHAFT B		1						
26	1	129A00-25210	GASKET, IDLE SHAFT B		1						
27	1	26106-080402	BOLT, M8X 40 PLATED		2						
28	1	119802-25071	BUSH, IDLE GEAR		1						1
29	1	129A00-25080	BUSH, IDLE GEAR B		1						1

Remarks
(1)Spare parts.

N:Old $\xleftarrow[\text{No}]{\text{Yes}}$ New, Q:Old $\xleftarrow[\text{Yes}]{\text{No}}$ New, R:Old $\xleftarrow[\text{Yes}]{\text{Yes}}$ New, S:Old $\xleftarrow[\text{No}]{\text{No}}$ New, W:Add, Z:Discontinued, F:Interchangeable by set, K:Q'ty Change

Copyright (C) 2021 YANMAR GLOBAL CS CO., LTD. All RightsReserved.

Fig.30. TURBINE

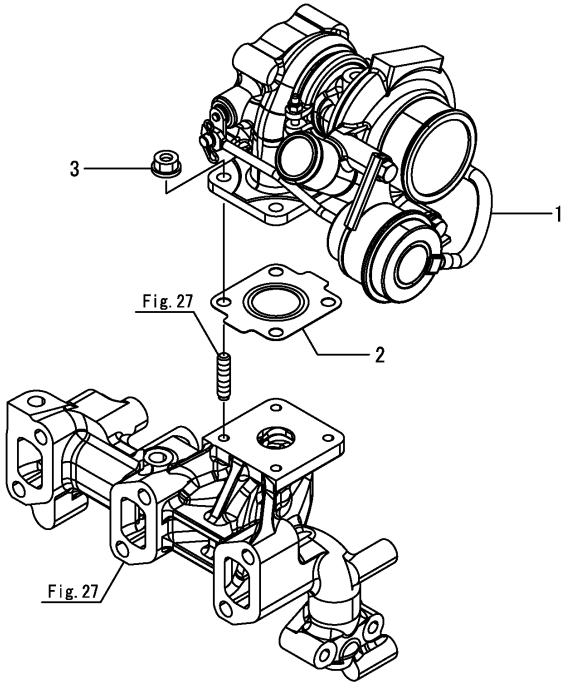

(A)=3TNV86CT-MASV (D)=
(B)=3TN86CHT-MASV (E)=
(C)= (F)=

No.	Lev.	Parts No.	Description	Q'ty (A)	(B)	(C)	(D)	(E)	(F)	I	R
1	1	129A05-18020	TURBOCHARGER ASSY,TD		1						
2	1	129C05-18080	GASKET,TC IN		1						
3	1	26306-080002	NUT, M8		4						

N:Old $\xleftarrow[\text{No}]{\text{Yes}}$ New, Q:Old $\xleftarrow[\text{Yes}]{\text{No}}$ New, R:Old $\xleftarrow[\text{Yes}]{\text{Yes}}$ New, S:Old $\xleftarrow[\text{No}]{\text{No}}$ New, W:Add, Z:Discontinued, F:Interchangeable by set, K:Q'ty Change

Copyright (C) 2021 YANMAR GLOBAL CS CO., LTD. All RightsReserved.

Fig.31. CRANKSHAFT & PISTON

(A)=3TNV86CT-MASV (D)=
(B)=3TN86CHT-MASV (E)=
(C)= (F)=

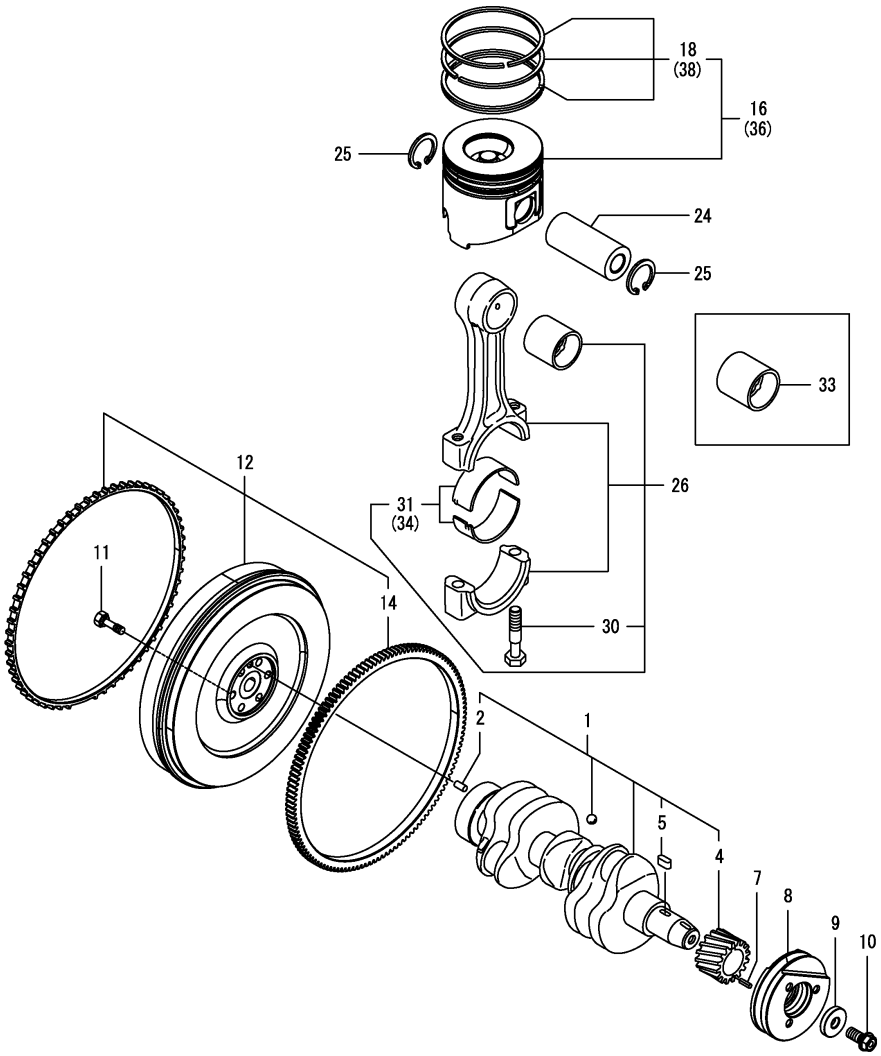

No.	Lev.	Parts No.	Description	Q'ty (A)	(B)	(C)	(D)	(E)	(F)	I	R
1	1	129A05-21000	CRANKSHAFT ASSY		1						
2	2	129100-01580	PIN, PARALLEL 8X16		1						
4	2	119803-21200	GEAR, CRANKSHAFT		1						
5	2	22512-070140	KEY, 7X 14		1						
7	1	22351-030010	PIN, SPRING 3.0X10		1						
8	1	129005-21650	V-PULLEY, CRANKSHAFT		1						
9	1	129795-21661	WASHER, 14		1						
10	1	121850-21680	BOLT, V-PULLEY		1						
11	1	121111-21501	BOLT, FLYWHEEL		6						
12	1	129A24-21580	FLYWHEEL ASSY		1						
14	2	119865-21600	GEAR, RING Z=116		1						
16	1	129C05-22000	PISTON ASSY		3						
18	2	129C05-22050	RING ASSY, PISTON		3						
24	1	129573-22301	PIN, PISTON D28 L69		3						
25	1	22252-000280	RING, 28		6						
26	1	129C05-23900	ROD ASSY, CONNECTING		3						
30	2	121550-23200	BOLT, CONNECTING ROD		6						
31	2	129C05-23600	BEARING ASSY, PIN		3						
33	1	129C05-23910	BUSH, PISTON PIN		3						1
34	1	129C05-23610	BEARING ASSY, PIN US		3						2
36	1	129C05-22900	PISTON ASSY, 0.25 OS		3						3
38	2	129C05-22950	RING ASSY, PISTON OS		3						3

Remarks
(1)Spare parts.
(2)Under-sized(U.S.=0.25) parts.
(3)Over-sized(O.S.=0.25) parts.

N:Old $\frac{\text{Yes}}{\text{No}}$ New, Q:Old $\frac{\text{No}}{\text{Yes}}$ New, R:Old $\frac{\text{Yes}}{\text{Yes}}$ New, S:Old $\frac{\text{No}}{\text{No}}$ New, W:Add, Z:Discontinued, F:Interchangeable by set, K:Q'ty Change

Copyright (C) 2021 YANMAR GLOBAL CS CO., LTD. All RightsReserved.

Fig.32. LUB. OIL SYSTEM

(A)=3TNV86CT-MASV
(B)=3TN86CHT-MASV
(C)=
(D)=
(E)=
(F)=

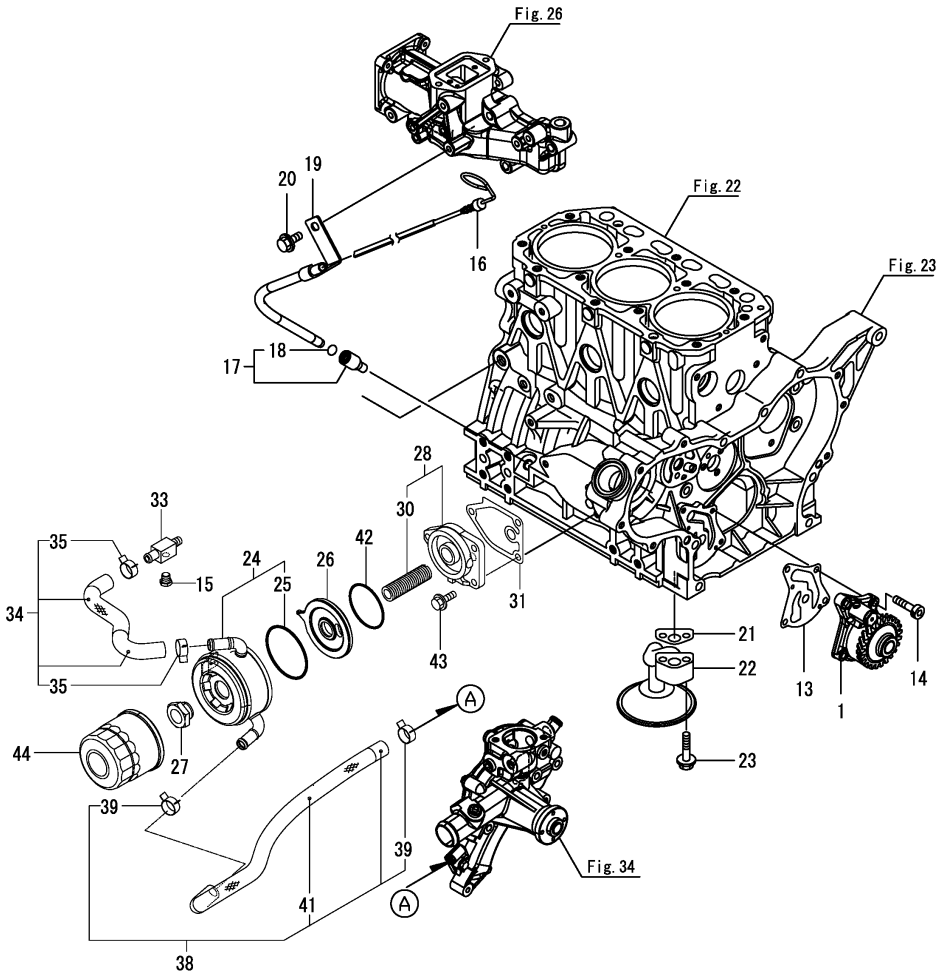

No.	Lev.	Parts No.	Description	Q'ty (A)	(B)	(C)	(D)	(E)	(F)	I	R
1	1	129A05-32000	PUMP ASSY, OIL		1						
13	1	129486-32020	GASKET, PUMP		1						
14	1	26450-060252	BOLT, M6X 25		4						
15	1	171056-49120	PLUG, DRAIN R1/4		1						
16	1	129601-34801	DIPSTICK, OIL		1						
17	1	119260-34810	GUIDE, DIPSTICK		1						
18	2	24316-240100	O-RING, 4DP10A		1						
19	1	129A00-34870	GUIDE, DIPSTICK		1						
20	1	26106-080162	BOLT, M8X 16 PLATED		1						
21	1	129150-35042	GASKET, INLET PIPE		1						
22	1	129100-35301	PIPE ASSY, OIL INLET		1						
23	1	26106-080352	BOLT, M8X 35 PLATED		2						
24	1	129908-33010	COOLER ASSY, OIL		1						
25	2	123912-33050	O-RING		1						
26	1	129A05-33101	BRACKET, LO COOLER		1						
27	1	129417-33111	NUT, OIL COOLER		1						
28	1	129648-35100	BRACKET ASSY, FILTER		1						
30	2	129648-35150	STUD		1						
31	1	129150-35111	GASKET, BRACKET		1						
33	1	129006-44480	JOINT, R02		1						
34	1	129A05-49030	HOSE ASSY,LO-C IN		1						
35	2	171008-03990	CLAMP, HOSE 18.5		2						
38	1	129A05-49040	HOSE ASSY,LO-C OUT		1						
39	2	171008-03990	CLAMP, HOSE 18.5		2						
41	2	129258-49090	TUBE, CORRUGATED		1						
42	1	24321-000600	O-RING, 1AG60.0		1						
43	1	26106-080202	BOLT, M8X 20 PLATED		3						
44	1	129150-35170	FILTER ASSY, D80X80L		1						1

Remarks
(1)Spare parts.

N:Old $\xleftrightarrow[\text{No}]{\text{Yes}}$ New, Q:Old $\xleftrightarrow[\text{Yes}]{\text{No}}$ New, R:Old $\xleftrightarrow[\text{Yes}]{\text{Yes}}$ New, S:Old $\xleftrightarrow[\text{No}]{\text{No}}$ New, W:Add, Z:Discontinued, F:Interchangeable by set, K:Q'ty Change

Copyright (C) 2021 YANMAR GLOBAL CS CO., LTD. All RightsReserved.

Fig.33. LUB. OIL PIPE

(A)=3TNV86CT-MASV
(B)=3TN86CHT-MASV
(C)=
(D)=
(E)=
(F)=

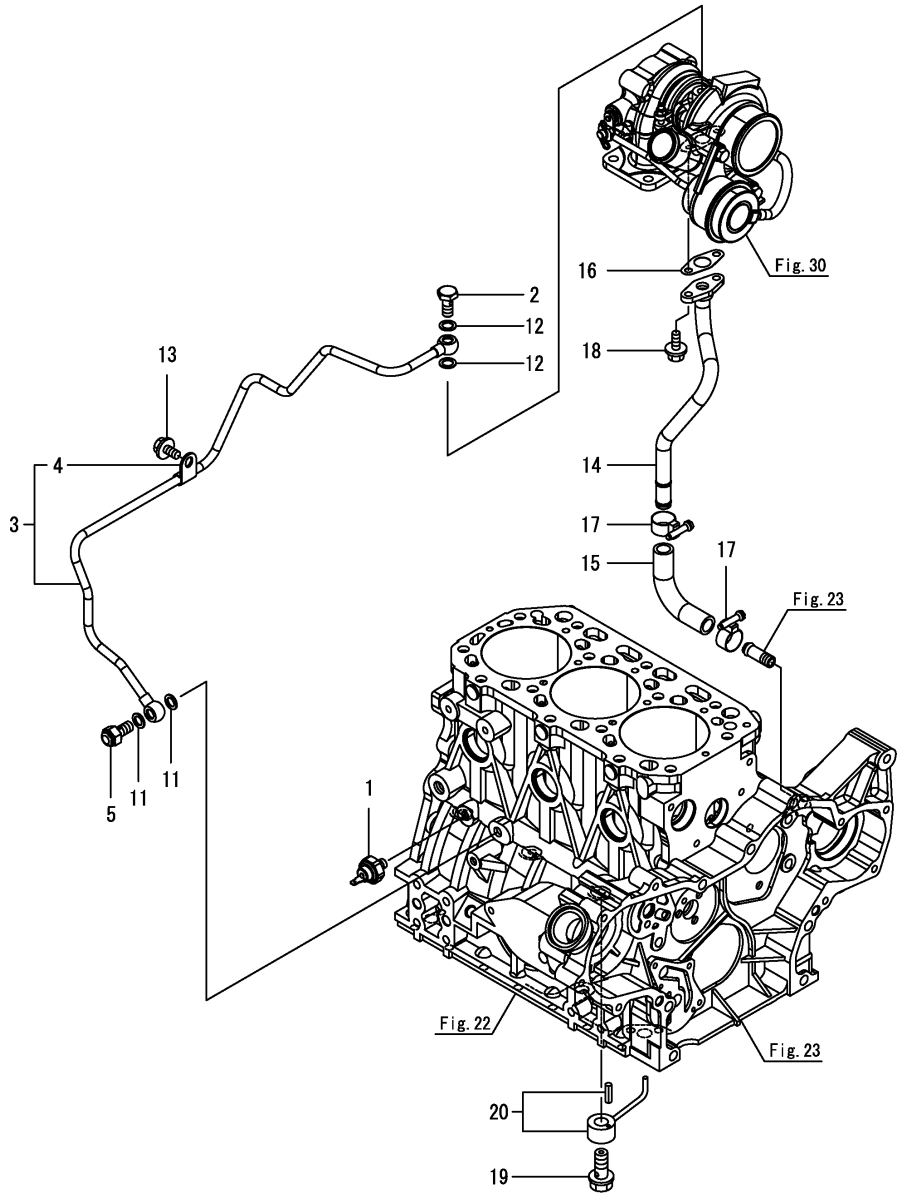

No.	Lev.	Parts No.	Description	Q'ty (A)	(B)	(C)	(D)	(E)	(F)	I	R
1	1	119761-39450	SWITCH, HYDRAULIC		1						
2	1	121252-39150	BOLT, JOINT M10X1.5		1						
3	1	129A05-39451	PIPE ASSY, LO T/C		1						
4	2	124223-39900	RETAINER		1						
5	1	129C05-39700	VALVE ASSY, CHECK		1						
11	1	22190-100002	WASHER, SEAL 10		2						
12	1	23414-100000	GASKET, 10X1.0		2						
13	1	26106-080122	BOLT, M8X 12 PLATED		1						
14	1	129A72-39600	PIPE, LO RETURN		1						
15	1	129266-39620	JOINT, OIL PIPE		1						
16	1	129C05-39690	GASKET, LO PIPE RTRN		1						
17	1	23000-022000	CLAMP, 22		2						
18	1	26106-060162	BOLT, M6X 16 PLATED		2						
19	1	129C05-39410	VALVE ASSY, CHECK		3						
20	1	129C05-39650	NOZZLE, PISTON		3						

N:Old ◄Yes/No► New, Q:Old ◄No/Yes► New, R:Old ◄Yes/Yes► New, S:Old ◄No/No► New, W:Add, Z:Discontinued, F:Interchangeable by set, K:Q'ty Change

Copyright (C) 2021 YANMAR GLOBAL CS CO., LTD. All RightsReserved.

Fig.34. COOLING WATER SYSTEM

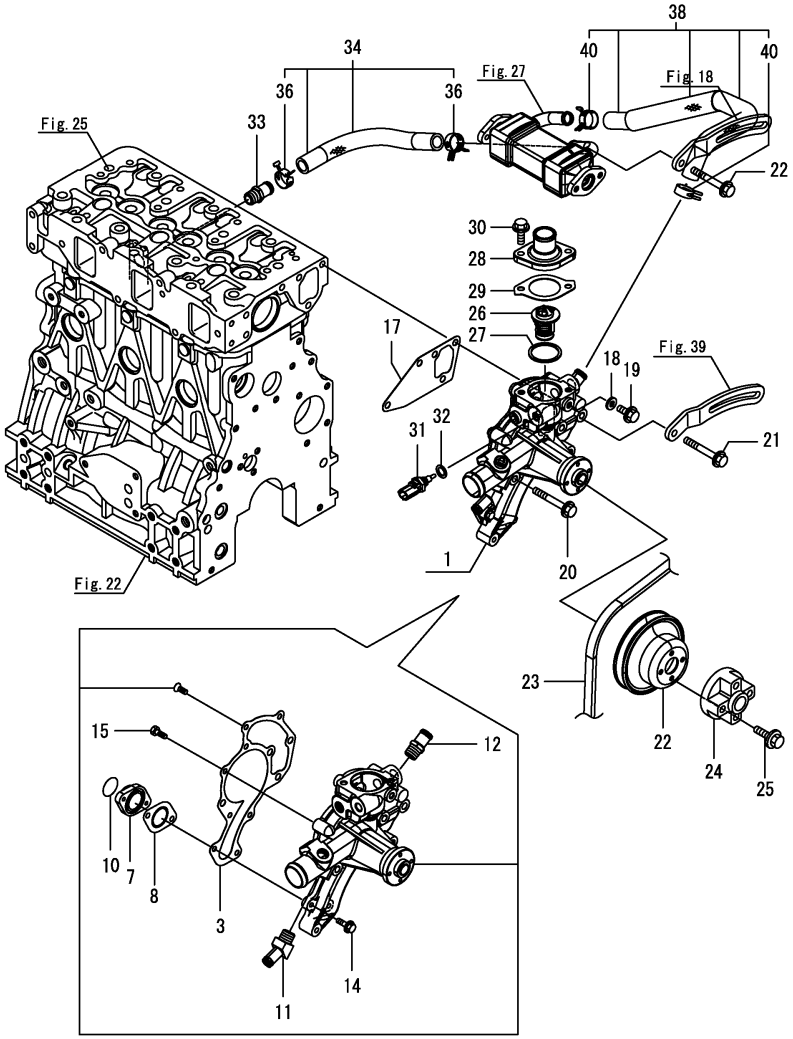

(A)=3TNV86CT-MASV (D)=
(B)=3TN86CHT-MASV (E)=
(C)= (F)=

No.	Lev.	Parts No.	Description	Q'ty (A)	(B)	(C)	(D)	(E)	(F)	I	R
1	1	129A72-42000	PUMP ASSY, CW HIGH		1						
3	2	129150-42059	GASKET		1						
7	2	129150-42302	FLANGE, OUTLET		1						
8	2	129150-42319	GASKET, FLANGE		1						
10	2	129054-42320	O-RING		1						
11	2	129055-49300	ELBOW, R3/8		1						
12	2	129928-49420	JOINT		1						
14	2	26106-060202	BOLT, M6X 20 PLATED		2						
15	2	26116-060162	BOLT, M6X 16 PLATED		3						
17	1	129486-42050	GASKET, WATER PUMP		1						
18	1	23414-080000	GASKET, 8X1.0		1						
19	1	26106-080122	BOLT, M8X 12 PLATED		1						
20	1	26106-080552	BOLT, M8X 55 PLATED		3						
21	1	26106-080602	BOLT, M8X 60 PLATED		1						
22	1	129403-42380	V-PULLEY, PUMP		1						
23	1	129940-42290	V-BELT, A42.5		1						
24	1	121267-44760	SPACER, FAN 18MM		1						
25	1	26106-060302	BOLT, M6X 30 PLATED		4						
26	1	129457-49801	THERMOSTAT, 82C		1						
27	1	129150-49811	GASKET, THERMOSTAT		1						
28	1	129350-49530	COVER, THERMOSTAT		1						
29	1	129795-49551	GASKET, COVER		1						
30	1	26106-080222	BOLT, M8X 22 PLATED		2						
31	1	129927-44900	SENSOR, TEMPERATURE		1						1
32	1	22190-120002	WASHER, SEAL 12		1						
33	1	129928-49420	JOINT		1						
34	1	129A00-49610	PIPE ASSY, EGR-C IN		1						
36	2	129960-03990	CLAMP, HOSE 19.8		2						
38	1	129A72-49610	HOSE ASSY, EGR-C OUT		1						
40	2	129960-03990	CLAMP, HOSE 19.8		2						

Remarks
(1)When replacing this part, it is necessary to update the software of the ECU using the designated service tool.
Please refer to the Service Manual for details.

N:Old ←Yes/No→ New, Q:Old ←No/Yes→ New, R:Old ←Yes/Yes→ New, S:Old ←No/No→ New, W:Add, Z:Discontinued, F:Interchangeable by set, K:Q'ty Change

Copyright (C) 2021 YANMAR GLOBAL CS CO., LTD. All RightsReserved.

Fig.35. FUEL SUPPLY PUMP

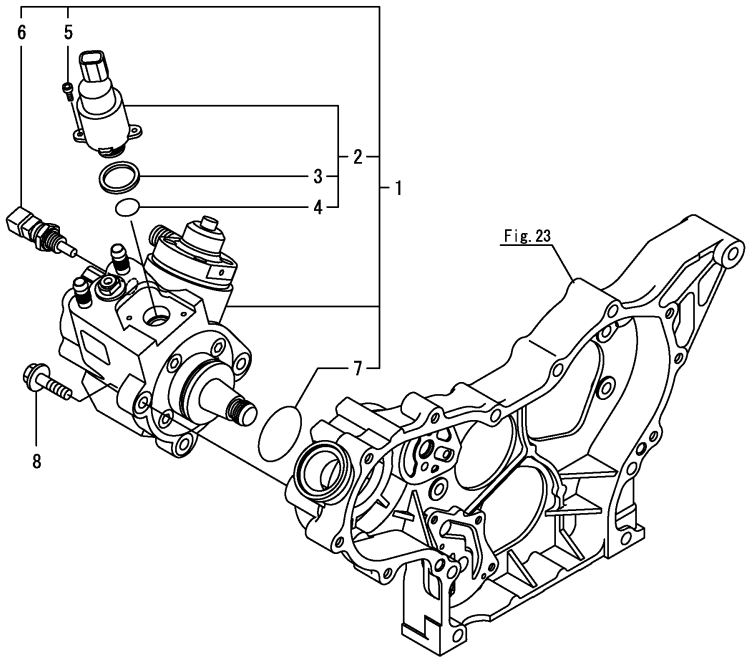

(A)=3TNV86CT-MASV (D)=
(B)=3TN86CHT-MASV (E)=
(C)= (F)=

No.	Lev.	Parts No.	Description	Q'ty (A)	(B)	(C)	(D)	(E)	(F)	I	R
1	1	129C28-51000	PUMP ASSY, FUEL		1						1
2	2	129A00-51100	VALVE ASSY		1						1
3	3	129A00-51110	RING, SEAL		1						
4	3	129A00-51120	O-RING, MPROP		1						
5	2	129A00-51130	BOLT, MPROP		2						
6	2	129A00-51200	SENSOR, TEMPERATURE		1						1
7	2	129A00-51900	O-RING, FUEL PUMP		1						
8	1	26106-080302	BOLT, M8X 30 PLATED		3						

Remarks
(1)When replacing this part, it is necessary to update the software of the ECU using the designated service tool.
Please refer to the Service Manual for details.

N:Old $\frac{\text{Yes}}{\text{No}}$ New, Q:Old $\frac{\text{No}}{\text{Yes}}$ New, R:Old $\frac{\text{Yes}}{\text{Yes}}$ New, S:Old $\frac{\text{No}}{\text{No}}$ New, W:Add, Z:Discontinued, F:Interchangeable by set, K:Q'ty Change

Copyright (C) 2021 YANMAR GLOBAL CS CO., LTD. All RightsReserved.

Fig.36. FUEL INJECTION VALVE

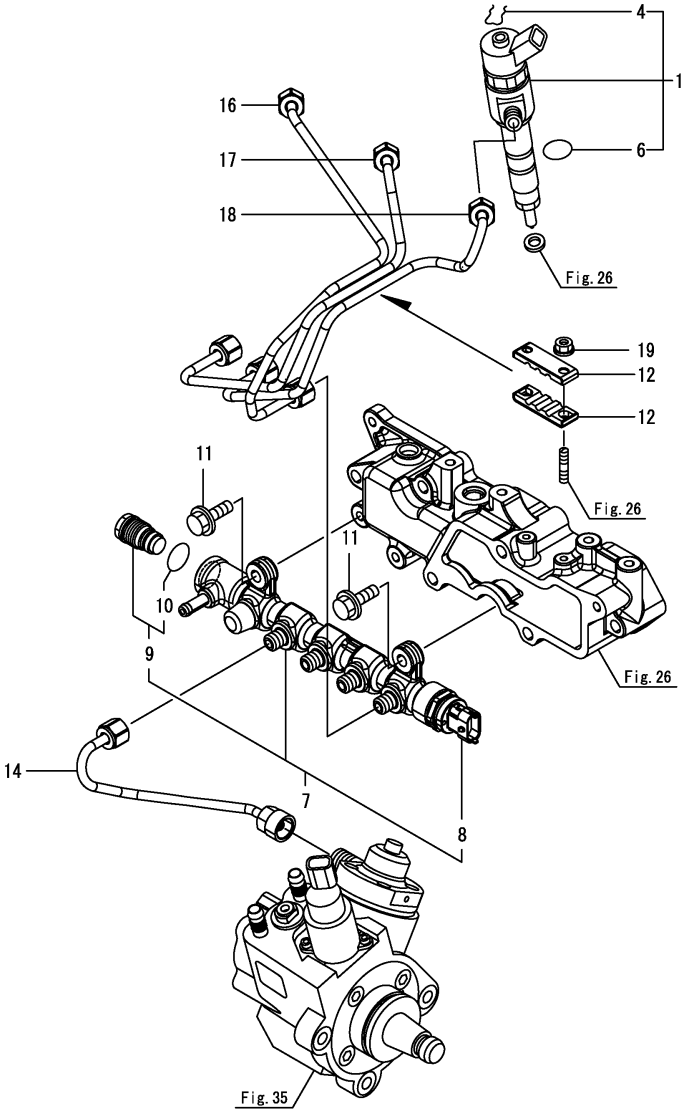

(A)=3TNV86CT-MASV (D)=
(B)=3TN86CHT-MASV (E)=
(C)= (F)=

No.	Lev.	Parts No.	Description	Q'ty (A)	(B)	(C)	(D)	(E)	(F)	I	R
1	1	129C05-53100	INJECTOR ASSY		3						1
4	2	129A00-53200	RING, RETAINING		3						
6	2	129C28-53300	O-RING		3						
7	1	129A00-57000	COMMON RAIL ASSY		1						1
8	2	129A00-57100	SENSOR, PRESSURE		1						1
9	2	129A00-57200	VALVE ASSY, PLV4		1						1
10	3	129A00-57210	O-RING, PLV4		1						
11	1	26106-080252	BOLT, M8X 25 PLATED		2						
12	1	123372-59100	RETAINER, PIPE		2						
14	1	129A00-59700	PIPE ASSY, RAIL IN		1						
16	1	129A00-59810	PIPE ASSY, INJECTION		1						
17	1	129A00-59820	PIPE ASSY, INJECTION		1						
18	1	129A00-59830	PIPE ASSY, INJECTION		1						
19	1	26366-060002	NUT, M6		2						

Remarks
(1)When replacing this part, it is necessary to update the software of the ECU using the designated service tool.
Please refer to the Service Manual for details.

N:Old $\overset{\text{Yes}}{\underset{\text{No}}{\leftrightarrow}}$ New, Q:Old $\overset{\text{No}}{\underset{\text{Yes}}{\leftrightarrow}}$ New, R:Old $\overset{\text{Yes}}{\underset{\text{Yes}}{\leftrightarrow}}$ New, S:Old $\overset{\text{No}}{\underset{\text{No}}{\leftrightarrow}}$ New, W:Add, Z:Discontinued, F:Interchangeable by set, K:Q'ty Change

Copyright (C) 2021 YANMAR GLOBAL CS CO., LTD. All RightsReserved.

Fig.37. FUEL PIPE

(A)=3TNV86CT-MASV
(B)=3TN86CHT-MASV
(C)=
(D)=
(E)=
(F)=

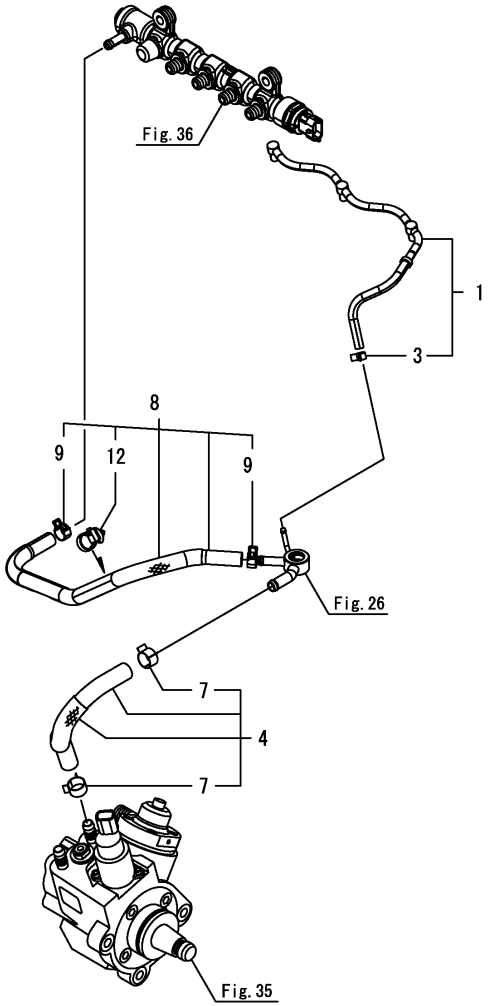

No.	Lev.	Parts No.	Description	Q'ty (A)	(B)	(C)	(D)	(E)	(F)	I	R
1	1	129A23-59500	PIPE ASSY, RETURN		1						
3	2	23080-007000	CLAMP, 7		1						
4	1	129A00-59020	PIPE ASSY, RETURN		1						
7	2	23080-015000	CLAMP, 15		2						
8	1	129A00-59030	PIPE ASSY, RETURN		1						
9	2	114270-59010	CLAMP, HOSE 12		2						
12	2	129A00-91200	CLIP, BAND		1						

N:Old ◄Yes/No► New, Q:Old ◄No/Yes► New, R:Old ◄Yes/Yes► New, S:Old ◄No/No► New, W:Add, Z:Discontinued, F:Interchangeable by set, K:Q'ty Change

Copyright (C) 2021 YANMAR GLOBAL CS CO., LTD. All RightsReserved.

Fig.38. STARTER MOTOR

(A)=3TNV86CT-MASV
(B)=3TN86CHT-MASV
(C)=
(D)=
(E)=
(F)=

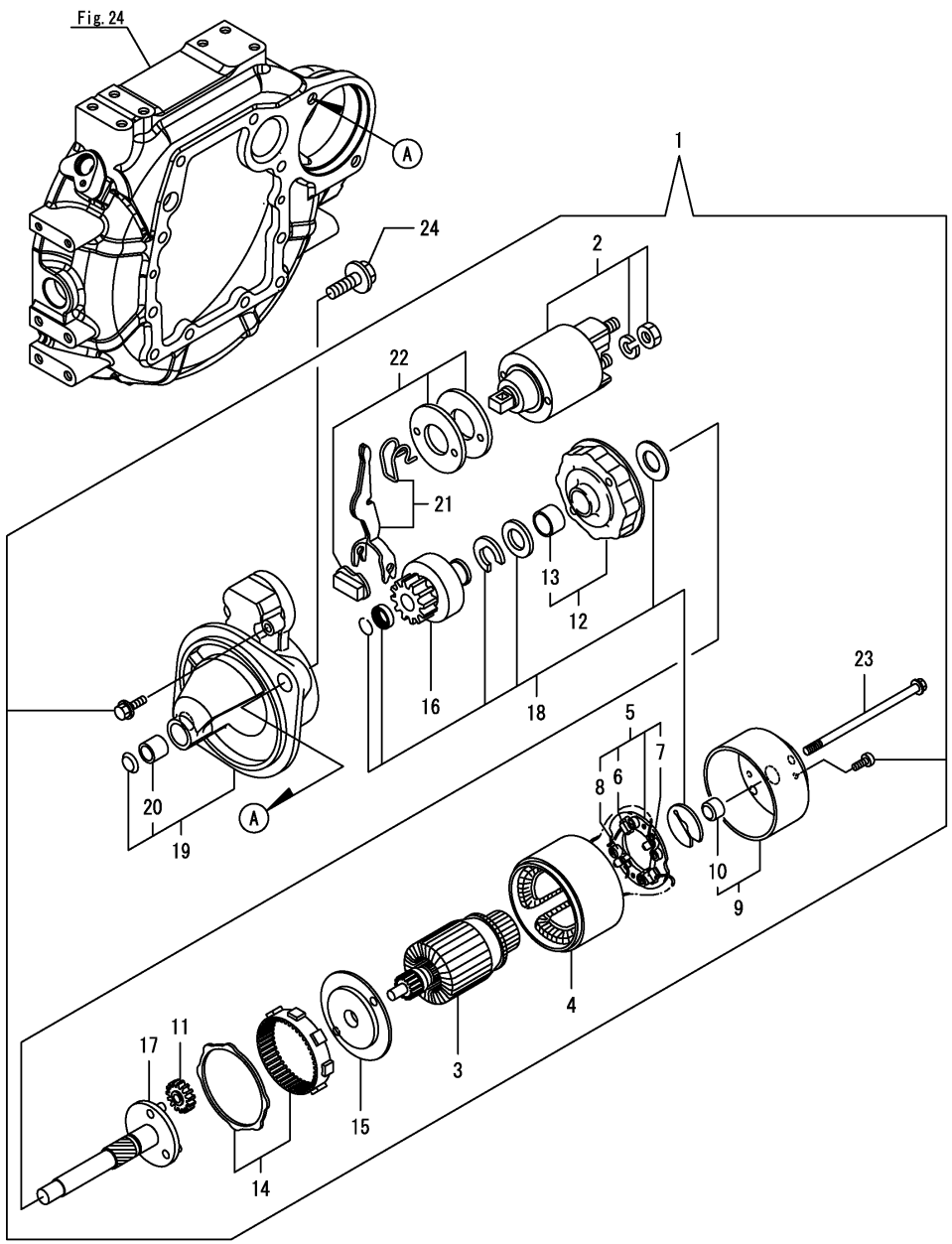

No.	Lev.	Parts No.	Description	Q'ty (A)	(B)	(C)	(D)	(E)	(F)	I	R
1	1	129242-77010	STARTER, 1.7		1						
2	2	129698-77030	SWITCH ASSY, MAGNET		1						
3	2	129242-77100	ARMATURE ASSY		1						
4	2	129242-77110	YOKE ASSY		1						
5	2	129242-77120	HOLDER ASSY, BRUSH		1						
6	3	129242-77130	BRUSH, -		2						
7	3	129242-77140	BRUSH SET		1						
8	3	129242-77150	SPRING, BRUSH		4						
9	2	129242-77160	COVER ASSY, STARTER		1						
10	3	129242-77170	METAL, REAR COVER		1						
11	2	118400-77230	GEAR, PLANET		3						
12	2	129242-77180	BRACKET, CENTER P		1						
13	3	129698-77190	BRACKET, CENTER		1						
14	2	129698-77200	GEAR, INTERNAL		1						
15	2	129242-77210	BRACKET, CENTER A		1						
16	2	129698-77220	PINION ASSY		1						
17	2	129698-77230	SHAFT, PINION		1						
18	2	129698-77250	WASHER SET		1						
19	2	129242-77260	CASE ASSY, GEAR		1						
20	3	X2114535200	METAL, STARTER		1						
21	2	129242-77270	LEVER SET, SHIFT		1						
22	2	129242-77280	COVER KIT, DUST		1						
23	2	124195-77770	BOLT, THROUGH		2						
24	1	26106-120252	BOLT, M12X 25 PLATED		2						

N:Old ◄Yes/No► New, Q:Old ◄No/Yes► New, R:Old ◄Yes/Yes► New, S:Old ◄No/No► New, W:Add, Z:Discontinued, F:Interchangeable by set, K:Q'ty Change

Copyright (C) 2021 YANMAR GLOBAL CS CO., LTD. All RightsReserved.

Fig.39. GENERATOR

(A)=3TNV86CT-MASV
(B)=3TN86CHT-MASV
(C)=
(D)=
(E)=
(F)=

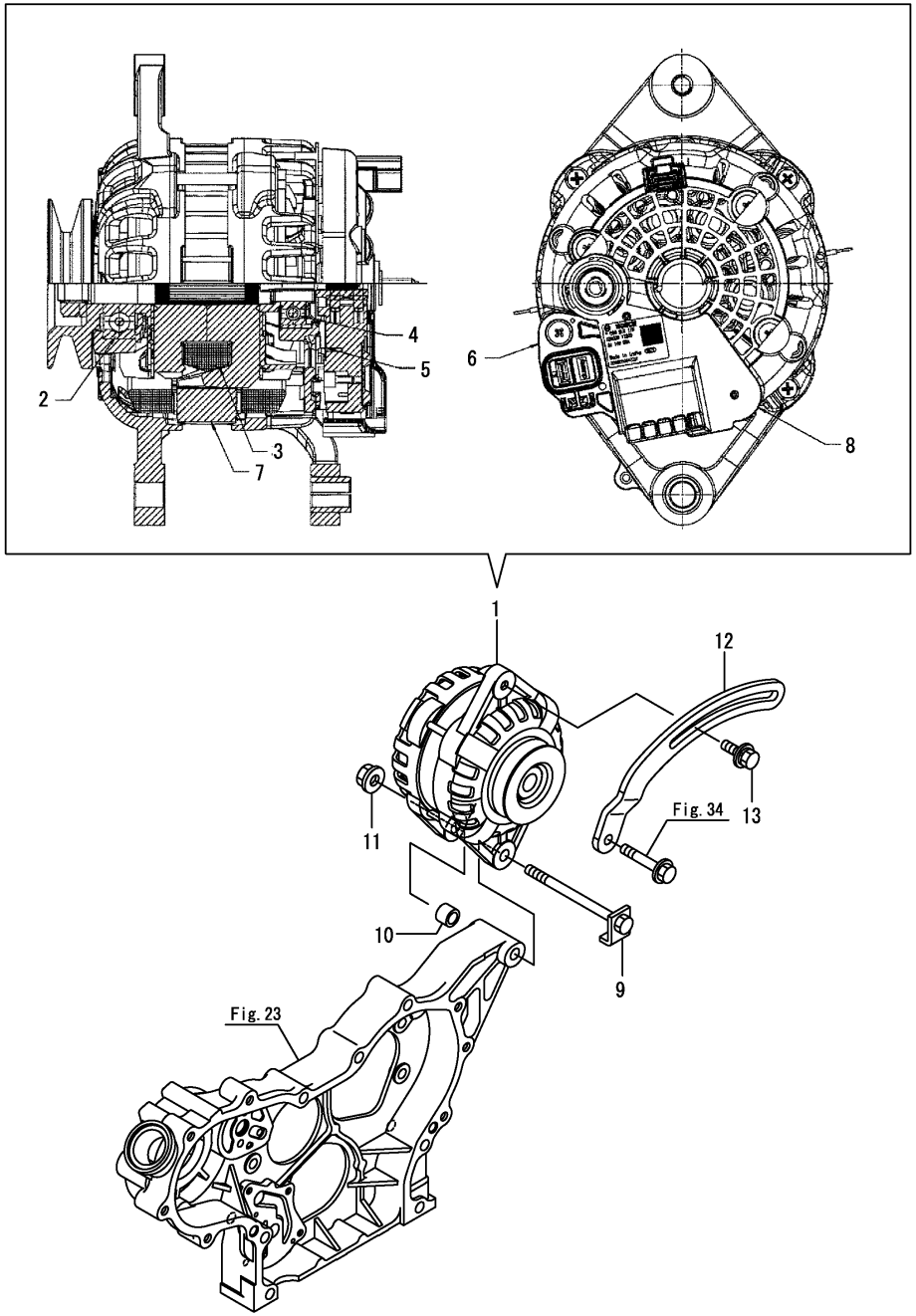

No.	Lev.	Parts No.	Description	Q'ty (A)	(B)	(C)	(D)	(E)	(F)	I	R
1	1	129908-77200	ALTERNATOR,		1						
2	2	129908-77710	BEARING, BALL FR		1						
3	2	129908-77720	ROTOR		1						
4	2	129908-77730	BEARING, BALL RR		1						
5	2	129908-77740	RECTIFIER		1						
6	2	129908-77750	REGULATOR		1						
7	2	129908-77760	STATOR		1						
8	2	129908-77770	PROTECTOR		1						
9	1	129908-77220	BOLT, STOPPER M10		1						
10	1	129A20-77350	PIECE, DISTANCE		1						
11	1	26306-100002	NUT, M10		1						
12	1	119440-77300	ADJUSTER, BELT		1						
13	1	119810-77340	BOLT, ADJUSTER L=30		1						

N:Old $\frac{\text{Yes}}{\text{No}}$ New, Q:Old $\frac{\text{No}}{\text{Yes}}$ New, R:Old $\frac{\text{Yes}}{\text{Yes}}$ New, S:Old $\frac{\text{No}}{\text{No}}$ New, W:Add, Z:Discontinued, F:Interchangeable by set, K:Q'ty Change

Copyright (C) 2021 YANMAR GLOBAL CS CO., LTD. All RightsReserved.

Fig.40. ELECTRONIC CONTROL UNIT(ECU)

(A)=3TNV86CT-MASV (D)=
(B)=3TN86CHT-MASV (E)=
(C)= (F)=

No.	Lev.	Parts No.	Description	Q'ty (A)	(B)	(C)	(D)	(E)	(F)	I	R
1	1	129A72-75000	ECU ASSY,386CHT-MASV		1						1
9	1	129A00-75910	ECU ASSY,SERVICE YMR		1						2

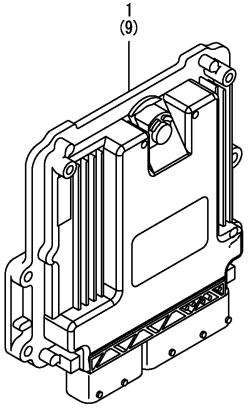

Remarks
(1)Eco ECU
This part cannot be ordered.
Replace the part using a Service ECU with the proper engine information installed.
(2)Service ECU
If the proper information is not installed, the engine will not operate.
To install proper information, go to an authorized distributor.

N:Old ◄Yes/No► New, Q:Old ◄No/Yes► New, R:Old ◄Yes/Yes► New, S:Old ◄No/No► New, W:Add, Z:Discontinued, F:Interchangeable by set, K:Q'ty Change

Copyright (C) 2021 YANMAR GLOBAL CS CO., LTD. All RightsReserved.

Fig.41. ELECTRIC PARTS

(A)=3TNV86CT-MASV (D)=
(B)=3TN86CHT-MASV (E)=
(C)= (F)=

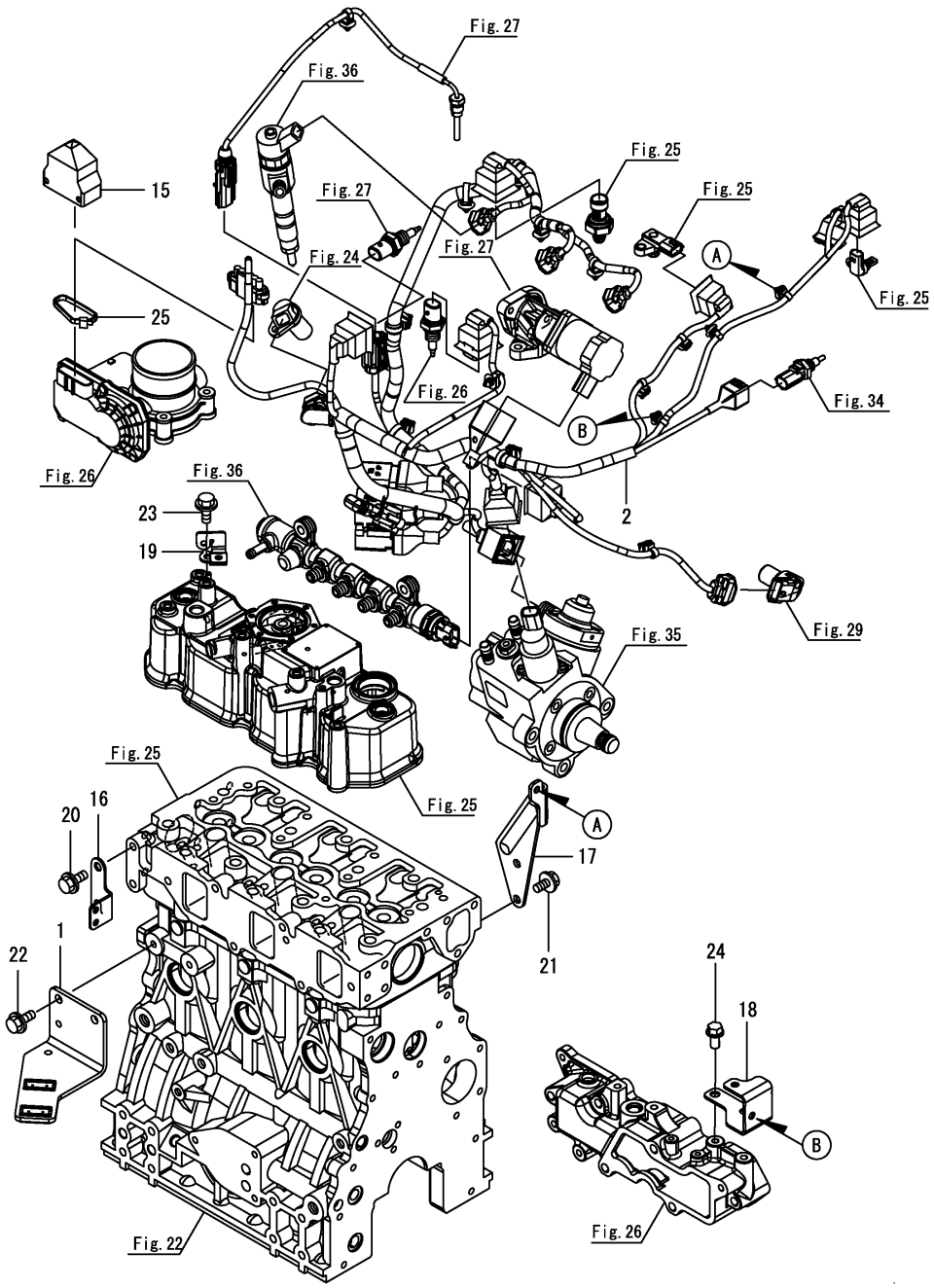

No.	Lev.	Parts No.	Description	Q'ty (A)	(B)	(C)	(D)	(E)	(F)	I	R
1	1	129A24-77940	BRACKET, CONNECTOR		1						
2	1	129A72-91400	HARNESS, T4 ENGINE		1						
15	1	129A00-91451	BOOT, CAP TYPE		1						
16	1	129A00-91600	BRACKET, HARNESS		1						
17	1	129A72-91600	BRACKET, HARNESS		1						
18	1	129A72-91610	BRACKET, HARNESS		1						
19	1	129A72-91620	BRACKET, HARNESS		1						
20	1	26106-080122	BOLT, M8X 12 PLATED		2						
21	1	26106-080122	BOLT, M8X 12 PLATED		2						
22	1	26106-080142	BOLT, M8X 14 PLATED		2						
23	1	26106-080162	BOLT, M8X 16 PLATED		1						
24	1	26106-080162	BOLT, M8X 16 PLATED		2						
25	1	29621-200000	BAND		1						

N:Old $\xleftarrow[\text{No}]{\text{Yes}}$ New, Q:Old $\xleftarrow[\text{Yes}]{\text{No}}$ New, R:Old $\xleftarrow[\text{Yes}]{\text{Yes}}$ New, S:Old $\xleftarrow[\text{No}]{\text{No}}$ New, W:Add, Z:Discontinued, F:Interchangeable by set, K:Q'ty Change

Copyright (C) 2021 YANMAR GLOBAL CS CO., LTD. All RightsReserved.

Fig.42. ACCESSORY

(A)=3TNV86CT-MASV (D)=
(B)=3TN86CHT-MASV (E)=
(C)= (F)=

No.	Lev.	Parts No.	Description	Q'ty (A)	(B)	(C)	(D)	(E)	(F)	I	R
1	1	129930-13201	GASKET, SILENCER		1						
2	1	172B02-17150	RELAY, CA TYPE C		1						

N:Old $\xleftrightarrow[\text{No}]{\text{Yes}}$ New, Q:Old $\xleftrightarrow[\text{Yes}]{\text{No}}$ New, R:Old $\xleftrightarrow[\text{Yes}]{\text{Yes}}$ New, S:Old $\xleftrightarrow[\text{No}]{\text{No}}$ New, W:Add, Z:Discontinued, F:Interchangeable by set, K:Q'ty Change

Copyright (C) 2021 YANMAR GLOBAL CS CO., LTD. All RightsReserved.

Parts No. Index

Parts No.	Fig. No.	Ref. No.
114270-59010	16	9
	37	9
118400-77230	17	11
	38	11
119131-18320	6	24
	9	3
	27	28
119260-34810	11	17
	32	17
119440-77300	18	12
	39	12
119609-32040	2	5
	23	5
119620-01750	3	3
	24	3
119624-32040	2	6
	23	6
119640-01640	3	8
	24	8
119640-61400	4	56
	25	52
119761-39450	12	1
	33	1
119802-03070	4	40
	25	40
119802-11260	4	4
	25	4
119802-11270	4	5
	25	5
119802-11280	4	6
	25	6
119802-25071	8	28
	29	28
119803-21200	10	4
	31	4
119803-77830	4	89
	25	82
119810-77340	18	13
	39	13
119865-21600	10	14
	31	14
119934-01800	2	12
	23	12
120130-11860	4	87
	25	85
120270-54410	4	32
	25	32
121111-21501	10	11
	31	11
121252-39150	12	8

Parts No.	Fig. No.	Ref. No.
121252-39150	33	2
121267-44760	13	25
	34	24
121550-23200	10	27
	31	30
121850-21680	10	10
	31	10
123372-59100	15	12
	36	12
123907-03100	4	42
	25	42
123907-03110	4	43
	25	43
123907-03120	4	44
	25	44
123907-03140	4	45
	25	45
123912-33050	32	25
124060-01050	1	11
	22	11
124085-35350	11	33
124160-01751	2	3
	4	37
	23	3
	25	37
124160-01910	1	12
		13
	22	12
		13
124160-11360	4	61
	25	57
124160-39140	12	7
124195-77770	17	23
	38	23
124223-39900	12	10
	33	4
124240-01871	2	13
	23	13
124460-11340	4	26
	25	26
129001-01250	1	4
	22	4
129001-02931	1	29
129004-03010	4	39
	25	39
129004-11241	4	1
	25	1
129004-11251	4	2
	25	2
129004-11650	4	8

Parts No.	Fig. No.	Ref. No.
129004-11650	25	8
129005-11100	4	22
129005-21650	10	8
	31	8
129006-35100	11	27
129006-44480	11	34
	32	33
129006-49040	11	39
129008-21000	10	1
129008-77800	4	85
	25	83
129009-11340	4	49
	25	49
129051-49310	13	34
129054-42320	13	12
	34	10
129055-49300	13	13
	34	11
129100-01580	2	2
	3	1
		15
	10	2
	23	2
	24	1
		15
	31	2
129100-01730	3	6
	24	6
129100-11112	25	23
129100-11130	4	24
129100-23910	10	30
129100-35301	11	22
	32	22
129122-44480	2	7
	23	7
129136-01780	3	7
	24	7
129150-01200	1	27
	22	27
129150-02020	1	6
	22	6
129150-02450	8	4
	29	4
129150-02871	1	32
129150-02931	1	24
	22	24
129150-02941	1	35
	22	35
129150-03070	4	41
	25	41

Parts No.	Fig. No.	Ref. No.
129150-11230	4	9
	25	9
129150-11280	4	7
	25	7
129150-11370	4	12
	25	12
129150-11750	4	11
	25	11
129150-11810	4	88
	25	86
129150-14200	8	1
	29	1
129150-14400	8	2
	29	2
129150-23601	10	28
129150-23611	10	31
129150-35042	11	21
	32	21
129150-35111	11	31
	32	31
129150-35170	11	45
	32	44
129150-42059	13	3
	34	3
129150-42302	13	9
	34	7
129150-42319	13	10
	34	8
129150-49811	13	28
	34	27
129202-22300	10	22
129242-77010	17	1
	38	1
129242-77100	17	3
	38	3
129242-77110	17	4
	38	4
129242-77120	17	5
	38	5
129242-77130	17	6
	38	6
129242-77140	17	7
	38	7
129242-77150	17	8
	38	8
129242-77160	17	9
	38	9
129242-77170	17	10
	38	10
129242-77180	17	12

Parts No. Index

Parts No.	Fig. No.	Ref. No.
129242-77180	38	12
129242-77210	17	15
	38	15
129242-77260	17	19
	38	19
129242-77270	17	21
	38	21
129242-77280	17	22
	38	22
129258-49090	32	41
129266-39620	12	3
	33	15
129350-49530	13	29
	34	28
129403-42380	13	23
	34	22
129410-03990	4	71
	25	67
129417-33111	32	27
129417-35150	11	29
129418-18320	6	7
		19
	27	23
129457-49801	13	27
	34	26
129486-01670	3	19
	24	19
129486-32020	11	13
	32	13
129486-42050	13	18
	34	17
129508-33031	11	24
129508-33060	11	25
129508-35100	11	26
129508-35150	11	30
129508-49030	11	35
129553-39650	12	20
129573-22301	31	24
129601-34801	11	16
	32	16
129642-49180	11	42
129648-01600	3	16
	24	16
129648-01780	3	18
	24	18
129648-35100	32	28
129648-35150	32	30
129698-77030	17	2
	38	2
129698-77190	17	13

Parts No.	Fig. No.	Ref. No.
129698-77190	38	13
129698-77200	17	14
	38	14
129698-77220	17	16
	38	16
129698-77230	17	17
	38	17
129698-77250	17	18
	38	18
129792-39410	12	14
129795-01950	2	4
	23	4
129795-02412	1	9
	22	9
129795-11120	4	23
	25	24
129795-11180	4	25
	25	25
129795-21661	10	9
	31	9
129795-49551	13	30
	34	29
129900-07900	4	64
	25	87
129908-33010	32	24
129908-77200	18	1
	39	1
129908-77220	18	9
	39	9
129908-77710	18	2
	39	2
129908-77720	18	3
	39	3
129908-77730	18	4
	39	4
129908-77740	18	5
	39	5
129908-77750	18	6
	39	6
129908-77760	18	7
	39	7
129908-77770	18	8
	39	8
129927-13810	6	28
	27	32
129927-44900	13	32
	34	31
129928-49420	13	14
	34	12
		33

Parts No.	Fig. No.	Ref. No.
129930-13201	7	1
	21	1
	28	1
	42	1
129940-42290	13	24
	34	23
129944-07910	4	90
	25	60
129960-03990	13	36
		40
	34	36
		40
129978-03270	4	78
	25	74
129978-03280	4	74
	25	70
129978-03380	4	79
	25	75
129978-11871	4	30
	25	30
129978-12700	4	50
129978-17500	7	28
	28	28
129978-17700	7	33
	28	33
129A00-01550	2	10
	23	10
129A00-01602	3	2
	24	2
129A00-11310	4	47
	25	47
129A00-11330	4	48
	25	48
129A00-11340	4	27
	25	27
129A00-11900	4	31
	25	31
129A00-12110	5	1
	26	1
129A00-12711	4	80
	25	76
129A00-12721	5	5
	26	5
129A00-12780	4	51
129A00-12790	4	81
	25	77
129A00-12810	5	14
	26	7
129A00-12820	5	29
	26	22

Parts No.	Fig. No.	Ref. No.
129A00-12900	5	30
	26	23
129A00-12910	5	31
	26	24
129A00-13110	6	2
	27	4
129A00-13300	6	8
129A00-13350	6	10
	7	23
	27	11
	28	23
129A00-13360	4	52
129A00-13380	4	54
	27	14
129A00-13400	6	13
	27	17
129A00-13410	6	14
	27	18
129A00-13710	5	23
	26	16
129A00-13720	5	24
	26	17
129A00-13752	6	26
	27	30
129A00-13770	27	7
129A00-13800	6	27
	27	31
129A00-13851	6	17
	27	21
129A00-13861	6	18
	27	22
129A00-13901	6	31
	27	35
129A00-13910	6	32
	27	36
129A00-13920	6	33
	27	37
129A00-14100	8	6
	29	6
129A00-14580	8	3
	29	3
129A00-14701	8	8
	29	8
129A00-14710	8	11
	29	11
129A00-16600	7	11
	28	11
129A00-16610	7	12
	28	12
129A00-16700	7	14

Parts No. Index

Parts No.	Fig. No.	Ref. No.
129A00-16700	28	14
129A00-16710	7	15
	28	15
129A00-16730	7	16
	28	16
129A00-16740	7	17
	28	17
129A00-17300	7	24
	28	24
129A00-17311	7	25
	28	25
129A00-17350	7	26
	28	26
129A00-17520	7	29
	28	29
129A00-17570	7	32
	28	32
129A00-17790	7	34
	28	34
129A00-21710	3	21
	24	21
129A00-25050	8	13
	29	13
129A00-25060	8	21
	29	21
129A00-25080	8	29
	29	29
129A00-25110	8	14
	29	14
129A00-25120	8	22
	29	22
129A00-25200	8	25
	29	25
129A00-25210	8	26
	29	26
129A00-25900	8	18
	29	18
129A00-34870	11	19
	32	19
129A00-49610	34	34
129A00-51100	14	2
	35	2
129A00-51110	14	3
	35	3
129A00-51120	14	4
	35	4
129A00-51130	14	5
	35	5
129A00-51200	14	6
	35	6

Parts No.	Fig. No.	Ref. No.
129A00-51900	14	7
	35	7
129A00-53200	15	4
	36	4
129A00-57000	15	7
	36	7
129A00-57100	15	8
	36	8
129A00-57200	15	9
	36	9
129A00-57210	15	10
	36	10
129A00-59020	16	4
	37	4
129A00-59030	16	8
	37	8
129A00-59110	5	18
	26	11
129A00-59120	5	19
	26	12
129A00-59700	15	14
	36	14
129A00-59810	15	16
	36	16
129A00-59820	15	17
	36	17
129A00-59830	15	18
	36	18
129A00-75910	19	9
	40	9
129A00-77820	4	86
	25	84
129A00-91200	4	72
	6	6
	7	37
	16	12
	25	68
	27	8
	28	37
	37	12
129A00-91231	20	12
129A00-91430	7	39
	28	39
129A00-91451	20	17
	41	15
129A00-91600	20	18
	41	16
129A01-01331	1	28
129A01-01560	1	1
129A01-11360	4	38

Parts No.	Fig. No.	Ref. No.
129A01-11700	4	13
129A01-12100	5	3
	26	3
129A01-12150	5	2
	26	2
129A01-12800	5	16
	26	9
129A01-12851	5	15
	26	8
129A01-13101	6	1
129A01-13350	6	21
129A01-13601	6	3
	27	5
129A01-13760	6	5
129A01-16030	7	5
129A01-16230	7	6
	28	6
129A01-16550	7	10
	28	10
129A01-18011	9	1
129A01-18080	9	2
129A01-18090	6	23
129A01-18200	5	7
129A01-18210	5	8
129A01-18220	5	9
129A01-22080	10	16
129A01-22500	10	18
129A01-22900	10	33
129A01-22950	10	35
129A01-32000	11	1
129A01-39460	12	9
129A01-53100	15	1
129A01-77310	4	76
	25	72
129A05-01150	22	1
129A05-01330	22	28
129A05-11351	25	38
129A05-11700	25	13
129A05-13100	27	1
129A05-13110	27	2
129A05-13300	27	9
129A05-13360	27	12
129A05-13430	27	25
129A05-18020	30	1
129A05-21000	31	1
129A05-32000	32	1
129A05-33101	32	26
129A05-39451	33	3
129A05-49030	32	34
129A05-49040	32	38

Parts No.	Fig. No.	Ref. No.
129A20-77350	18	10
	39	10
129A23-49630	13	35
129A23-49640	13	39
129A23-59500	16	1
	37	1
129A24-21580	10	12
	31	12
129A24-77940	20	1
	41	1
129A32-03120	4	73
129A32-03350	4	75
129A32-75070	19	1
129A32-91220	20	2
129A33-01500	2	1
	23	1
129A33-39610	12	2
129A33-42002	13	1
129A72-03100	4	66
	25	62
129A72-03120	25	69
129A72-03130	4	77
	25	73
129A72-03350	25	71
129A72-16000	28	5
129A72-16400	28	8
129A72-39600	33	14
129A72-42000	34	1
129A72-49610	34	38
129A72-75000	40	1
129A72-91400	41	2
129A72-91600	20	19
	41	17
129A72-91610	20	20
	41	18
129A72-91620	41	19
129A88-17760	7	42
	28	42
129C00-13860	7	3
	28	3
129C00-13870	7	4
	28	4
129C00-16400	7	8
129C00-16801	7	18
	28	18
129C00-91200	7	38
	28	38
129C01-13700	5	17
	26	10
129C01-16690	7	13

Parts No. Index

Parts No.	Fig. No.	Ref. No.
129C01-16690	28	13
129C05-02600	22	32
129C05-02810	22	29
129C05-11100	25	22
129C05-12700	25	50
129C05-13120	27	3
129C05-13700	25	51
129C05-18080	30	2
129C05-18090	27	27
129C05-22000	31	16
129C05-22050	31	18
129C05-22900	31	36
129C05-22950	31	38
129C05-23600	31	31
129C05-23610	31	34
129C05-23900	31	26
129C05-23910	31	33
129C05-39410	33	19
129C05-39650	33	20
129C05-39690	33	16
129C05-39700	33	5
129C05-53100	36	1
129C22-17610	7	31
	28	31
129C28-51000	14	1
	35	1
129C28-53300	15	6
	36	6
129E00-13620	6	16
	27	20
129F01-13600	6	15
	27	19
129F01-13620	6	4
	27	6
129F01-13650	6	22
	27	26
171008-03990	11	36
		40
	32	35
		39
171051-01921	1	5
	22	5
171056-49120	11	15
	32	15
172B02-17150	21	2
	42	2
22190-080002	2	14
	23	14
22190-100002	12	11
	33	11

Parts No.	Fig. No.	Ref. No.
22190-120002	13	33
	34	32
22190-140002	5	20
	26	13
22190-220002	3	10
	24	10
22217-180000	8	19
	29	19
22252-000260	10	23
22252-000280	31	25
22351-030010	10	7
	12	21
	31	7
22351-060012	4	33
	25	33
22512-070140	8	7
	10	5
	29	7
	31	5
22857-500100	4	57
		58
		59
	25	53
		54
		55
22857-500160	5	21
	26	14
23000-022000	12	4
	33	17
23000-048000	5	10
23000-054000	5	11
23000-060000	5	12
23000-070000	4	82
	25	78
23000-075000	5	13
23000-080000	25	79
23080-007000	16	3
	37	3
23080-015000	11	38
		43
	16	7
	37	7
23297-080061	6	9
	27	10
23414-080000	13	19
	34	18
23414-100000	12	12
	33	12
23414-120000	6	11
	27	15

Parts No.	Fig. No.	Ref. No.
24311-000120	4	62
	25	58
24311-000320	2	8
	4	63
	23	8
	25	59
24316-000160	12	5
24316-240100	11	18
	32	18
24321-000600	32	42
26106-060102	8	9
	29	9
26106-060122	6	12
	27	16
26106-060142	4	83
	25	80
26106-060162	7	35
	12	6
	28	35
	33	18
26106-060202	5	32
	13	16
	26	25
	34	14
26106-060302	13	26
	34	25
26106-060402	5	33
	26	26
26106-060902	5	34
	26	27
26106-080122	12	13
	13	20
	20	22
		23
	33	13
	34	19
	41	20
		21
26106-080142	7	19
	8	10
	20	21
	28	19
	29	10
	41	22
26106-080162	2	9
		15
	3	11
	4	65
		84
		91

Parts No.	Fig. No.	Ref. No.
26106-080162	11	20
	20	24
	23	9
		15
	24	11
	25	61
		81
		88
	32	20
	41	23
		24
26106-080202	7	36
		43
	11	44
	28	36
		43
	32	43
26106-080222	7	20
	13	31
	28	20
	34	30
26106-080252	3	12
	4	34
	6	29
	15	11
	24	12
	25	34
	27	33
	36	11
26106-080302	14	8
	35	8
26106-080352	2	16
	3	20
	4	35
	11	23
	23	16
	24	20
	25	35
	32	23
26106-080402	2	17
	8	27
	23	17
	29	27
26106-080452	3	13
	8	17
	24	13
	29	17
26106-080502	3	14
	4	36
	5	6

Parts No. Index

Parts No.	Fig. No.	Ref. No.
26106-080502	5	25
	6	20
	24	14
	25	36
	26	6
		18
	27	24
26106-080552	13	21
	34	20
26106-080602	2	18
	13	22
	23	18
	34	21
26106-080752	5	26
	26	19
26106-080852	2	19
	23	19
26106-100202	7	40
	28	40
26106-120252	17	24
	38	24
26116-060162	13	17
	34	15
26206-100252	3	4
	24	4
26206-100302	3	5
	24	5
26216-060202	5	4
	26	4
26216-080352	5	22
	26	15
26216-081052	5	27
	26	20
26306-080002	5	28
	6	25
		30
		34
	7	21
		41
	9	4
	26	21
	27	29
		34
		38
	28	21
		41
	30	3
26306-100002	18	11
	39	11
26366-060002	15	19

Parts No.	Fig. No.	Ref. No.
26366-060002	36	19
26450-060162	3	22
	4	60
	8	12
	24	22
	25	56
	29	12
26450-060252	11	14
	32	14
26776-180002	8	20
	29	20
27241-120000	1	14
	22	14
27241-300000	1	10
	22	10
27241-400000	4	21
	25	21
27310-080001	4	28
	25	28
29621-100000	20	25
29621-200000	20	26
	41	25
729402-23100	10	24
X2114535200	17	20
	38	20

Parts No.	Fig. No.	Ref. No.

Parts No.	Fig. No.	Ref. No.