Master Parts Manual

RC-50
Rubber Track Loader

Part Number: 0200-589
Printed (4-09)

Table of Contents

1. **Cab (R.O.P.S.) Assembly**
   Serial # RSC 00101-2285 . . . . . **1-A**
   Serial # RSC 02286-Current* **1-B**

2. **Light Bar Assembly**
   Serial # RSC 00101-2285 . . . . . **2-A**
   Serial # RSC 02286-Current* **2-B**

3. **Enclosed Cab (R.O.P.S.) Assembly**
   (Optional)Serial # RSC 00101-Current* . . . **3-A**

4. **Chassis Assembly**
   Serial # RSC 00101-2285 . . . . . **4-A**
   Serial # RSC 02286-Current* **4-B**

5. **Hood Assembly**
   Serial # RSC 00101-Current* **5-A**

6. **Radiator/Oil Cooler Assembly**
   Serial # RSC 00101-2285 . . . . . **6-A**
   Serial # RSC 02286-2554 . . . . . **6-B**
   Serial # RSC 02555-Current* **6-C**

7. **Hydraulic Reservoir Assembly**
   Serial # RSC 00101-2285 . . . . . **7-A**
   Serial # RSC 02286-Current* **7-B**

8. **Hydraulic Control Assembly**
   Serial # RSC 00101-2285 . . . . . **8-A**
   Serial # RSC 02286-Current* **8-B**

9. **Drive/Auxiliary Pump Assembly**
   Serial # RSC 00101-2285 . . . . . **9-A**
   Serial # RSC 02286-Current* **9-B**

10. **Engine Assembly**
    Serial # RSC 01554-Current* **10-A**

11. **Fuse Panel Assembly**
    Serial # RSC 00101-2285 . . . . . **11-A**
    Serial # RSC 02286-Current* **11-B**

12. **Torsion Axle Assembly**
    Serial # RSC 00101-Current* **12-A**

13. **Undercarriage Assembly (RT)**
    Serial # RSC 00101-698 . . . . . **13-A**
    Serial # RSC 00699-Current* **13-B**

14. **Undercarriage Assembly (LT)**
    Serial # RSC 00101-698 . . . . . **14-A**
    Serial # RSC 00699-Current* **14-B**

15. **Lift Arm Assembly**
    Serial # RSC 00101-2285 . . . . . **15-A**
    Serial # RSC 02286-Current* **15-B**

16. **Lift Arm Tubes and Fittings**
    Serial # RSC 00101-2285 . . . . . **16-A**
    Serial # RSC 02286-Current* **16-B**

17. **Quick Attach Assembly**
    Serial # RSC 00101-2285 . . . . . **17-A**
    Serial # RSC 02286-Current* **17-B**

18. **Cab Heater Assembly**
    (Optional) Serial # RSC 00101-Current* . . . **18-A**

19. **Heater/Air Conditioning Assembly**
    (Optional) Serial # RSC 00101-Current* . . . **19-A**

20. **Track Installation Tool**
    (Tool) Serial # RSC 00101-Current* **20-A**

* Current refers to the machines being produced at the time this manual was printed. See manual cover for print date.

GENERAL SERVICE ITEMS & LUBRICANTS

ITEM	MANUFACTURER/DESCRIPTION	ASV P/N
-Engine Oil Filter	Perkins (140517050)	0200-377
-Primary Air Filter	Donaldson (P822768)	0200-339
-Secondary Air Filter	Donaldson (P822769)	0200-340
-Engine Fuel Filter	Perkins (26560017)	0200-213
-Fuel screen	Perkins (130366110)	0200-561
-Water Separator O-ring		0201-985
-Fan Belt	Perkins (080109107)	0200-363
-Antifreeze/Coolant (1 gal.)	Ethylene Glycol (long life)	0300-766
-Antifreeze/Coolant (Case/6 gal.)	Ethylene Glycol (long life)	0402-841
-Engine Oil (1 qt.)	Multi-Grade 10W-30	0300-767
-Engine Oil (Case/12 qt.)	Multi-Grade 10W-30	0402-838
-Engine Oil (1 gal.)	Multi-Grade 10W-30	0402-839
-Engine Oil (Case/6 gal.)	Multi-Grade 10W-30	0402-840
-Grease (1 Tube)	Multi-Purpose Lithium	0300-769
-Grease (Box/10 Tubes)	Multi-Purpose Lithium	0402-844
-Grease (Case/40 Tubes)	Multi-Purpose Lithium	0402-834

HYDRAULIC SERVICE ITEMS & LUBRICANTS

ITEM	DESCRIPTION	ASV P/N
-Hydraulic Oil Filter	Element,Filter,MP	0200-204
-Hydraulic Oil (5 gal.)	All Season MV	0400-253
-Hydraulic Oil (55 gal.)	All Season MV	0402-833
-Kit,Seal,Loader Valve & Relief	FIts Loader Valve (P/N:0304-020)	2010-094

O-RING	ASV P/N
# 4, ORB Type	0314-366
# 6, ORB Type	0310-619
# 8, ORB Type	0307-353
# 10, ORB Type	0310-620
# 12, ORB Type	0310-621
# 16, ORB Type	0307-354
# 20, ORB Type	0310-832

CYLINDER SERVICE ITEMS

ITEM	DESCRIPTION	ASV P/N
-Hydraulic Oil Filter	Element,Filter,MP	0200-204
-Hydraulic Oil (5 gal.)	All Season MV	0400-253
-Hydraulic Oil (55 gal.)	All Season MV	0402-833
-Kit,Seal,Loader Valve & Relief	FIts Loader Valve (P/N:0304-020)	2010-094
SN:101-2285		
-Kit,Seal,Bucket/Tilt Cylinder	FIts Cylinder (P/N:0200-121)	0200-305
-Rod,Bucket/Tilt Cylinder	FIts Cylinder (P/N:0200-121)	0081-019
-End Gland,Bucket/Tilt Cylinder	FIts Cylinder (P/N:0200-121)	0200-483
-Nut,Bucket/Tilt Cylinder	FIts Cylinder (P/N:0200-121)	0081-004
-Kit,Seal,Lift Arm Cylinder	FIts Cylinder (P/N:0200-005)	0200-304
-End Gland,Lift Arm Cylinder	FIts Cylinder (P/N:0200-005)	0081-003
-Rod,Lift Arm Cylinder	FIts Cylinder (P/N:0200-005)	0081-005
-Nut,Lift Arm Cylinder	FIts Cylinder (P/N:0200-005)	0081-004
SN:2286-2743		
-Kit,Seal,Bucket/Tilt Cylinder	FIts Cylinder (P/N:2030-234/235)	0003-046
-Rod,Bucket/Tilt Cylinder	FIts Cylinder (P/N:2030-234/235)	0003-044
-End Gland,Bucket/Tilt Cylinder	FIts Cylinder (P/N:2030-234/235)	0003-045
-Nut,Bucket/Tilt Cylinder	FIts Cylinder (P/N:2030-234/235)	0003-037
-Kit,Seal,Lift Arm Cylinder	FIts Cylinder (P/N:2030-236)	0003-046
-End Gland,Lift Arm Cylinder	FIts Cylinder (P/N:2030-236)	0003-045
-Rod,Lift Arm Cylinder	FIts Cylinder (P/N:2030-236)	0003-050
-Nut,Lift Arm Cylinder	FIts Cylinder (P/N:2030-236)	0003-037
SN:2744-Current*		
-Kit,Seal,Bucket/Tilt Cylinder	FIts Cylinder (P/N:2030-286/287)	0081-030
-Rod,Bucket/Tilt Cylinder	FIts Cylinder (P/N:2030-286/287)	0003-044
-End Gland,Bucket/Tilt Cylinder	FIts Cylinder (P/N:2030-286/287)	0003-045
-Nut,Bucket/Tilt Cylinder	FIts Cylinder (P/N:2030-286/287)	0003-037
-Kit,Seal,Lift Arm Cylinder	FIts Cylinder (P/N:2030-285)	0081-031
-End Gland,Lift Arm Cylinder	FIts Cylinder (P/N:2030-285)	0003-045
-Rod,Lift Arm Cylinder	FIts Cylinder (P/N:2030-285)	0003-050
-Nut,Lift Arm Cylinder	FIts Cylinder (P/N:2030-285)	0003-037

* Current refers to the machines being produced at the time this manual was printed. See manual cover for print date.

CATERPILLAR ENGINE SERVICE ITEMS

(Machine Serial #: RSC 00101-1553)

ITEM	MANUFACTURER/DESCRIPTION	ASV P/N
Engine Oil Filter	Caterpillar (220-1523)	0304-398
Primary Air Filter	Donaldson (P822768)	0200-339
Secondary Air Filter	Donaldson (P822769)	0200-340
Engine Fuel Filter	Caterpillar (0676987)	0200-212
Fan Belt	Caterpillar (211-5172)	0200-363

CAB (R.O.P.S.) ASSEMBLY (SN: RSC 00101-2285)

REF. NO.	PART NUMBER	QTY.	DESCRIPTION
1	0304-318	1	BOX,OWNERS MANUAL
2	0304-320	1	DECAL,OWNER'S MANUAL
3	0304-306	1	DECAL,WARNING,LOAD
4	0310-169	1	FILM-DANGER (LOADER) (REACHING
5	8050-157	1	WASHER,WROUGHT,3/16,STD,ZN
6	2030-220	1	SPRING,2.25x0.45
7	0301-033	1	WASHER,FENDER,1/4 x 1 1/4,STL,
8	2030-218	1	LEVER,THROTTLE
9	0302-546	1	KNOB,PLASTIC,1-7/8 DIA,1/2-13
10	8050-282	7	WASHER,WROUGHT,3/8,STD,ZN
11	0303-071	2	WASHER,NYLON,BLACK,1" OD
12	8040-486	6	NUT,HEX,NYLOCK,3/8-16 UNC,ZN
13	0303-099	2	WASHER,STAR,3/8,INT/EXT TOOTH
14	0304-496	1	PAD,SKID
15	8102-227	2	CAPSCREW,HH,3/8-16UNCx2.0 GD8
16	0201-865	1	BUSHING,FOOT PEDAL
17	0201-925	1	WLMT,PEDAL
18	0304-422	1	DECAL, R-SERIES
19	0201-902	1	CLEVIS,1/4-28,W/PIN
20	2030-219	1	ROD,THREADED,1/4x28x4375
21	0301-121	2	NUT,JAM,1/4-28 UNF
22	0314-215	1	CONNECTOR,JOINT,BALL
23	0314-214	1	STUD,JOINT,BALL
24	0200-567	1	BRACKET,THROTTLE
25	8040-396	2	NUT,HEX,NYLOCK,1/4-28 UNF,ZN
26	0307-606	1	PLUG,FINSISHING,STEEL,1-3/8"
27	0201-867	1	BUSHING
28	0304-466	1	STOP,LAPBAR
29	8050-240	10	WASHER,STAINLESS,1/4",MS
30	0304-465	4	CAPSCREW,HH,M6-1.0x16mm
31	0304-467	1	BRKT,LAPBAR
32	8040-606	4	NUT,HEX,NYLOCK,1/2-13 UNC,ZN
33	0304-468	2	RING,SNAP,LAPBAR
34	8102-404	4	CAPSCREW,HH 1/2-13UNCx1.25 GD8
35	0304-019	1	ASSY,LAP BAR
36	0304-470	1	MNT,LAPBAR
37	0304-477	2	SPACER,LAPBAR
38	0304-471	2	SPRING,GAS,ASSIST
39	0304-472	1	MNT,LAPBAR,SWITCH
40	0304-476	1	GROMMET,RUBBER

REF. NO.	PART NUMBER	QTY.	DESCRIPTION
41	0304-473	1	SENSOR,SWITCH,LAPBAR
42	0304-305	1	DECAL,THROTTLE
43	0310-143	1	FILM-WARNING,RIDERS
44	0201-265	1	DECAL,WARNING,FIRE HAZARD
45	0310-122	1	FILM-WARNING (MOUNT) (DISMOUNT
46	0304-400	6	CLIP,FASTENER
47	0403-110	1	KIT, ROPS
48	0301-637	1	GROMMET (1840)
49	0304-247	1	LIGHT,REAR
50	0200-288	1	BULB,HALOGEN
51	0200-320	2	WLMT,STOP LAP BAR
52	0200-321	2	PAD,RUBBER,W/ADHESIVE
53	8102-044	5	CAPSCREW,HH,1/4-20UNCx1.25,GD8
54	8051-212	5	WASHER,SPRING LOCK,1/4,ZN
55	0200-290	1	INSULATION,TOP
56	0200-291	1	INSULATION,MIDDLE
57	0200-292	1	INSULATION,BOTTOM
58	0200-328	1	PLATE,FIREWALL
59	0200-264	1	HOUSING,POWER SOURCE
60	0304-579	6	PLUG,HOLE,PLASTIC,5/16
61	0304-276	1	WLMT,LEVER,THROTTLE
62	0304-501	1	TUBING, SPACER
63	0304-602	1	CAPSCREW,FH,WIZLOC,3/8-16X1.75
64	0310-307	4	SCREW,MACHINE,4-40x.50
65	0310-308	4	NUT,HEX,NYLOCK 4-40
66	0412-036	1	BRACKET LAP BAR ACTIVATION SWITCH

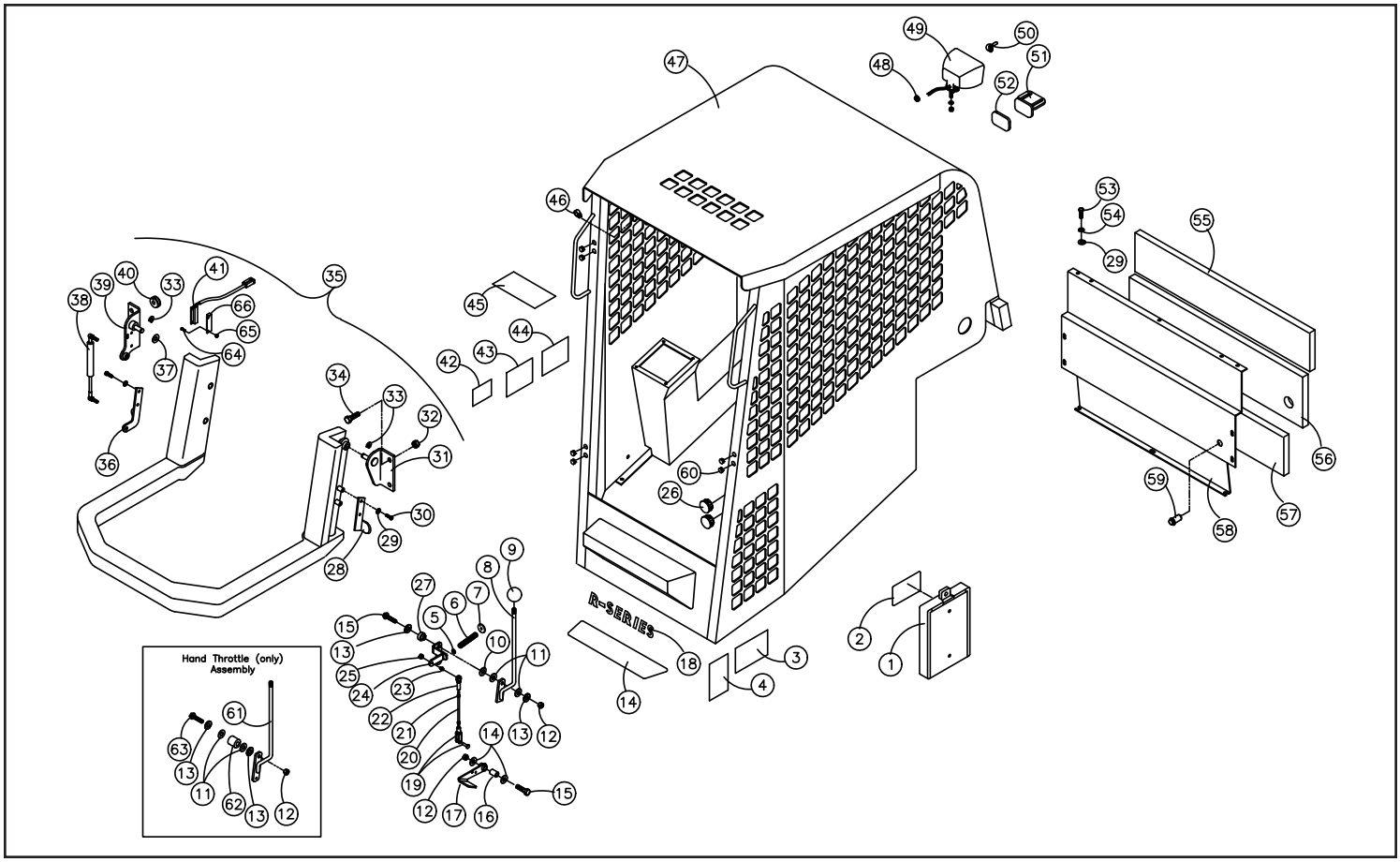

CAB (R.O.P.S.) ASSEMBLY (SN: RSC 02286-Current)

REF. NO.	PART NUMBER	QTY.	DESCRIPTION
1	0304-318	1	BOX,OWNERS MANUAL
2	0304-320	1	DECAL,OWNER'S MANUAL
3	0304-306	1	DECAL,WARNING,LOAD
4	0310-169	1	FILM-DANGER (LOADER) (REACHING
5	8050-157	1	WASHER,WROUGHT,3/16,STD,ZN
6	0201-903	1	SPRING,1.75X0.48
7	0301-033	1	WASHER,FENDER,1/4 x 1 1/4,STL,
8	0201-912	1	LEVER,THROTTLE
9	0302-546	1	KNOB,PLASTIC,1-7/8 DIA,1/2-13
10	8050-282	7	WASHER,WROUGHT,3/8,STD,ZN
11	0303-071	2	WASHER,NYLON,BLACK,1" OD
12	8040-486	6	NUT,HEX,NYLOCK,3/8-16 UNC,ZN
13	0303-099	2	WASHER,STAR,3/8,INT/EXT TOOTH
14	0304-485	4	SCREW,MACH,10-24x3/4,STAINLESS
15	8102-227	2	CAPSCREW,HH,3/8-16UNCx2.0 GD8
16	0201-865	1	BUSHING,FOOT PEDAL
17	0201-925	1	WLMT,PEDAL
18	0200-587	1	CONSOLE,LH
19	0201-902	1	CLEVIS,1/4-28,W/PIN
20	0201-910	1	ROD,THREADED,1/4-28x7.125
21	0301-121	2	NUT,JAM,1/4-28 UNF
22	0314-215	1	CONNECTOR,JOINT,BALL
23	0314-214	1	STUD,JOINT,BALL
24	0200-567	1	BRACKET,L,THROTTLE
25	8040-396	2	NUT,HEX,NYLOCK,1/4-28 UNF,ZN
26	0307-606	4	PLUG,FINSISHING,STEEL,1-3/8"
27	0201-867	1	BUSHING
28	0304-466	1	STOP,LAPBAR
29	8050-240	10	WASHER,STAINLESS,1/4",MS
30	0304-465	4	CAPSCREW,HH,M6-1.0x16mm
31	0304-467	1	BRKT,LAPBAR
32	8040-606	4	NUT,HEX,NYLOCK,1/2-13 UNC,ZN
33	0304-468	2	RING,SNAP,LAPBAR
34	8102-404	4	CAPSCREW,HH 1/2-13UNCx1.25 GD8
35	0304-019	1	ASSY,LAP BAR
36	0304-470	1	MNT,LAPBAR
37	0304-477	2	SPACER,LAPBAR
38	0304-471	2	SPRING,GAS,ASSIST
39	0304-472	1	MNT,LAPBAR,SWITCH
40	0304-476	1	GROMMET,RUBBER

REF. NO.	PART NUMBER	QTY.	DESCRIPTION
41	0304-473	1	SENSOR,SWITCH,LAPBAR
42	0304-305	1	DECAL,THROTTLE
43	0310-143	1	FILM-WARNING,RIDERS
44	0201-265	1	DECAL,WARNING,FIRE HAZARD
45	0310-122	1	FILM-WARNING (MOUNT) (DISMOUNT
46	0304-400	6	CLIP,FASTENER
47	2030-237	1	WLMT,CAB
48	0301-637	1	GROMMET (1840)
49	0304-247	1	LIGHT,REAR
50	0200-288	1	BULB,HALOGEN
51	0200-320	2	WLMT,STOP LAP BAR
52	0200-321	2	PAD,RUBBER,W/ADHESIVE
53	8102-044	5	CAPSCREW,HH,1/4-20UNCx1.25,GD8
54	8051-212	5	WASHER,SPRING LOCK,1/4,ZN
55	0200-290	1	INSULATION,TOP
56	0200-291	1	INSULATION,MIDDLE
57	0200-292	1	INSULATION,BOTTOM
58	0200-328	1	PLATE,FIREWALL
59	0200-264	1	HOUSING,POWER SOURCE
60	0304-579	6	PLUG,HOLE,PLASTIC,5/16
61	0304-276	1	WLMT,LEVER,THROTTLE
62	0304-501	1	TUBING, SPACER
63	0304-602	1	CAPSCREW,FH,WIZLOC,3/8-16X1.75
64	0090-012	8	WASHER FINISHING #10 SS
65	0090-011	4	SCREW OH PH #10 x 1.25 SS
66	0090-010	4	NUT SPEED #10
67	8102-220	6	CAPSCREW,HH,3/8-16x0.75",GD8
68	8051-272	6	WASHER,SPRING LOCK,3/8,ZN
69	0200-600	2	MNT JOYSTICK
70	0304-496	1	PAD,SKID
71	0200-588	1	CONSOLE,RH
72	2030-231	1	HARNESS,CAB
73	0412-036	1	BRACKET LAP BAR ACTIVATION SWITCH
74	0310-308	4	NUT,HEX,NYLOCK 4-40
75	0310-307	4	SCREW,MACHINE,4-40x.50

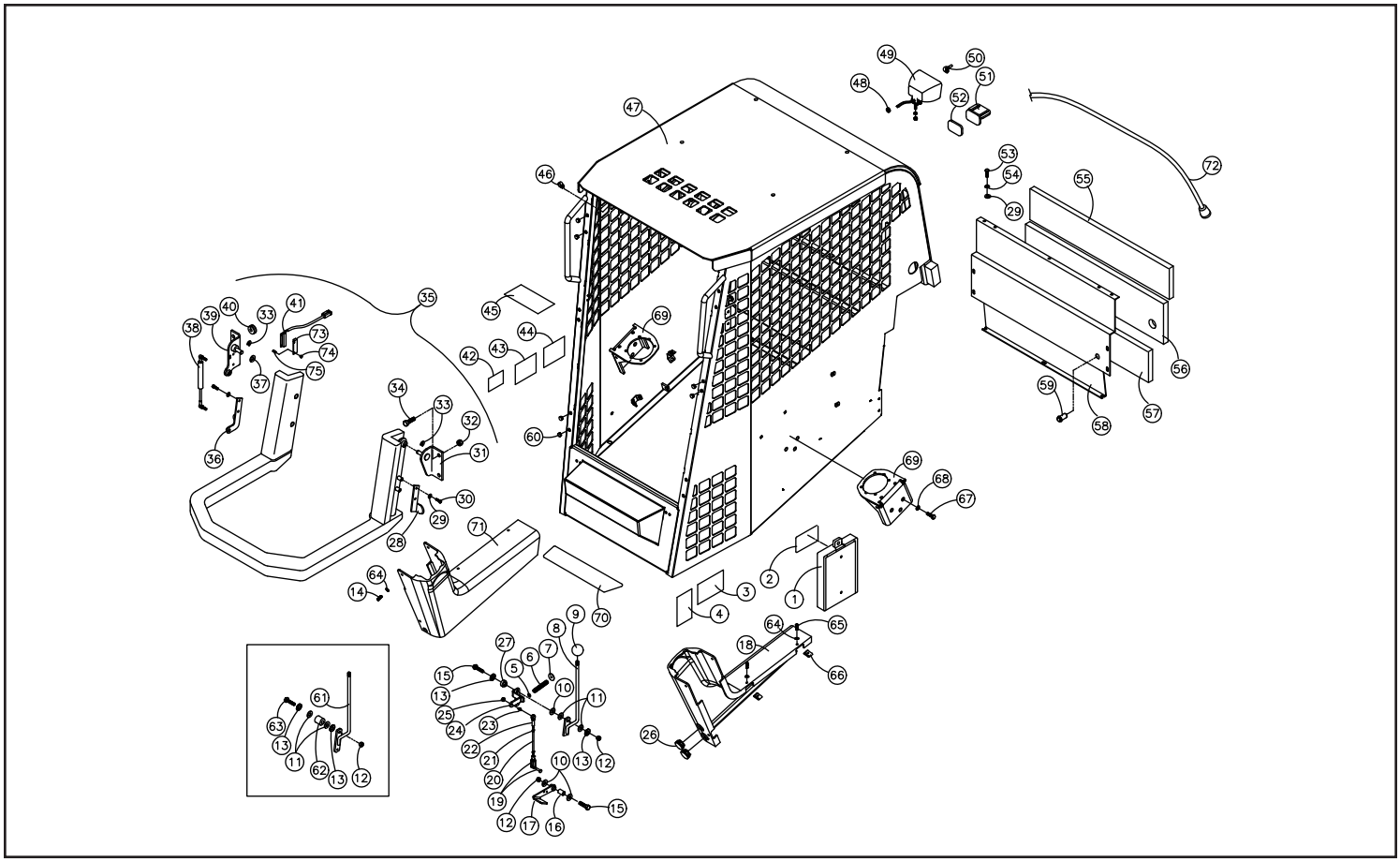

LIGHT BAR ASSEMBLY (SN: RSC 00101-2285)

REF. NO.	PART NUMBER	QTY.	DESCRIPTION
1	0304-463	1	WLMT,BAR,LIGHT
2	8102-037	8	CAPSCREW,HH,1/4-20 UNCx.50,GD8
3	8040-366	8	NUT,HEX,NYLOCK,1/4-20 UNC,ZN
4	0304-411	1	PLUG, HOLE, 3/4", PLASTIC
5	0200-272	1	DECAL,ASV LOGO
6	8102-142	2	CAPSCREW,HH,5/16-18x3.25,GD8
7	8051-242	2	WASHER,SPRING LOCK,5/16,ZN
8	0304-650	1	HARNESS,GAUGE
9	2030-146	1	DECAL,DASH,RC60
10	0304-022	1	GAUGE,CONSOLE
11	0304-028	1	SWITCH,IGNITION,RC
12	8050-620	1	WASHER,WROUGHT,1.0,SAE,ZN
13	2045-432	1	KEY,SWITCH,START
14	0200-252	1	SWITCH,3 POSITION,LOCKING
15	0310-126	1	SWITCH,LIGHT
16	0310-138	4	PLUG
17	0304-121	1	SWITCH,ON/OFF
18	0200-254	1	GAUGE,LEVEL
19	8009-220	2	SCREW,MACH,PH,6-32x.75
20	8005-224	2	CAPSCREW,SOC HD,#6-32UNCx1.25
21	0304-514	1	ASSY,LIGHT,DOME
22	0302-965	2	WASHER,RIVET,#7
23	8041-801	2	NUT,HEX,NYLOCK, 6-32
24	0304-430	2	PLATE,MNT
25	0310-713	4	GASKET, SWITCH
26	0310-237	1	RECEPTACLE,POWER
27	2015-042	1	HARNESS,JUMPER,QA
28	0304-223	2	HOUSING,HEADLIGHT
29	0304-475	2	BULB,HEADLIGHT

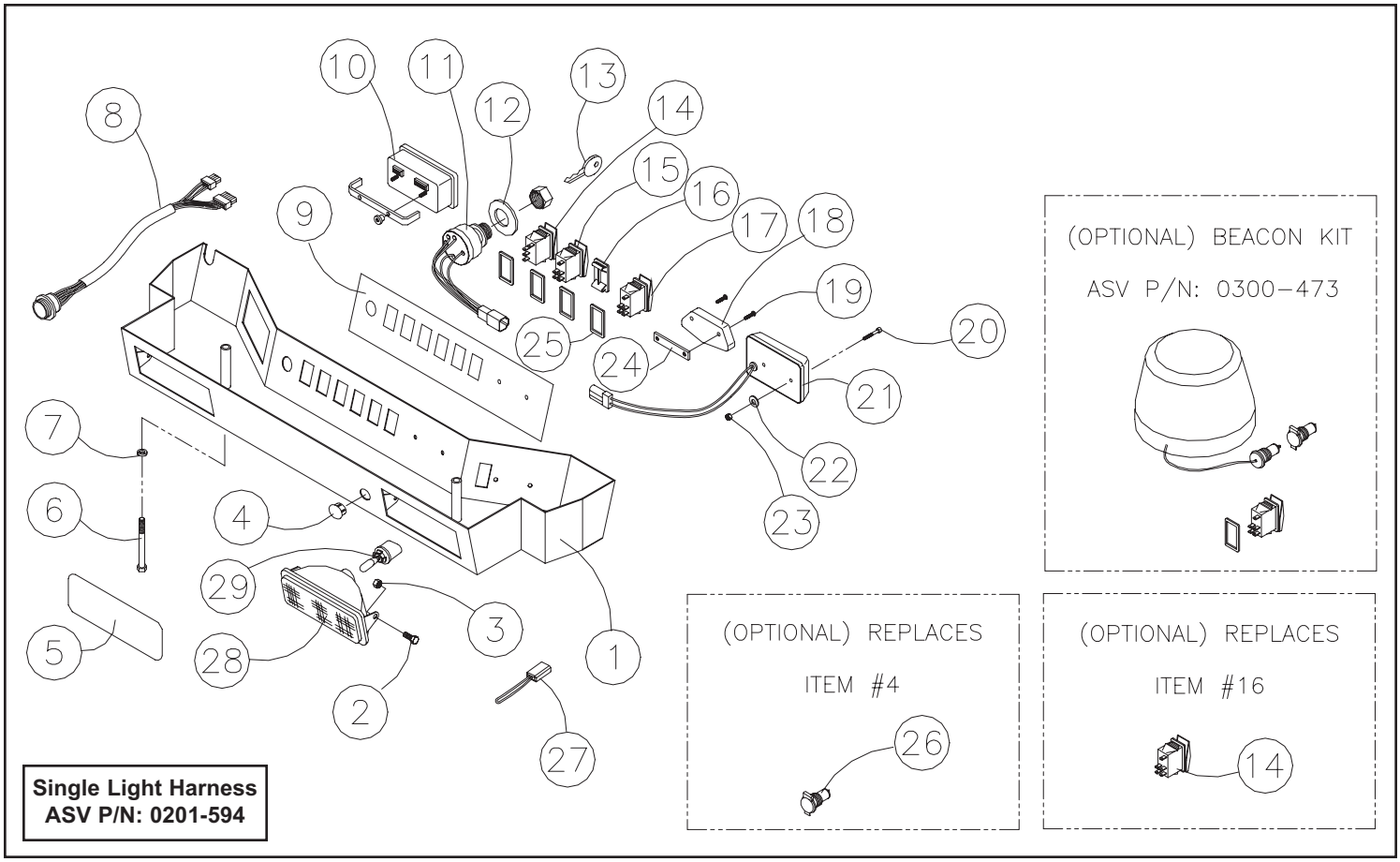

LIGHT BAR ASSEMBLY (SN: RSC 02286-Current)

REF. NO.	PART NUMBER	QTY.	DESCRIPTION
1	2030-144	1	CONSOLE,RC60
2	2045-756	4	LIGHT 35W W/BEZEL
3	0201-595	2	HARNESS,LIGHT,DOUBLE
4	0304-411	1	PLUG, HOLE, 3/4", PLASTIC
5	0200-272	1	DECAL,ASV LOGO
6	8102-142	2	CAPSCREW,HH,5/16-18x3.25,GD8
7	8051-242	2	WASHER,SPRING LOCK,5/16,ZN
8	0304-650	1	HARNESS,GAUGE
9	0200-286	1	DECAL,DASH,RC50
10	0304-022	1	GAUGE,CONSOLE
11	0304-028	1	SWITCH,IGNITION,RC
12	8050-620	1	WASHER,WROUGHT,1.0,SAE,ZN
13	2045-432	1	KEY,SWITCH,START
14	0200-252	1	SWITCH,3 POSITION,LOCKING
15	0310-126	1	SWITCH,LIGHT
16	0310-138	5	PLUG
17	2015-042	1	HARNESS,JUMPER,QA
18	0200-254	1	GAUGE,LEVEL
19	8009-220	2	SCREW,MACH,PH,6-32x.75
20	8005-224	2	CAPSCREW,SOC HD,#6-32UNCx1.25
21	0304-514	1	ASSY,LIGHT,DOME
22	0302-965	2	WASHER,RIVET,#7
23	8041-801	2	NUT,HEX,NYLOCK, 6-32
24	0304-430	2	PLATE,MNT
25	0310-713	4	GASKET, SWITCH
26	0310-237	1	RECEPTACLE,POWER
27	0201-952	1	SPACER .625OD, .38 ID x 2 5/16"
28	2030-189	1	SWITCH, SELF LEVEL
29	2045-380	1	RING, KEY, ASV LOGO

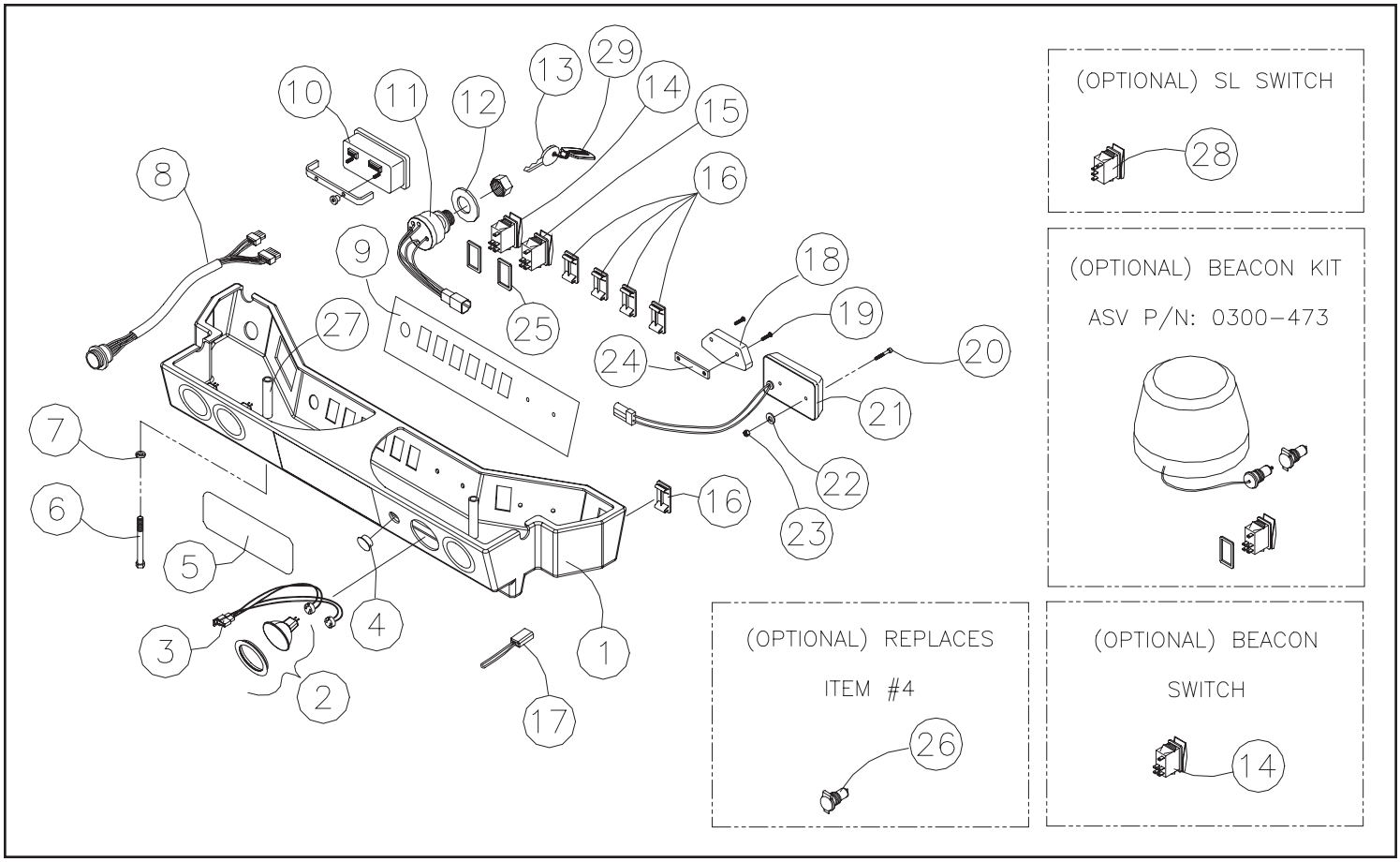

ENCLOSED CAB (R.O.P.S.) ASSEMBLY (SN: RSC 00101-Current)

REF. NO.	PART NUMBER	QTY.	DESCRIPTION
1	0402-760	1	GLASS,UPPER,RH
2	0402-769	1	GLASS,SLIDER,SINGLE,RH
3	0402-762	1	GLASS,LOWER,RH
4	0304-480	2	WLMT,HINGE,DOOR
5	0314-208	2	BUSHING,HINGE
6	8102-136	6	CAPSCREW,HH,5/16-18x1.75 ZN GD
7	8040-426	8	NUT,HEX,NYLOCK,5/16-18 UNC,ZN
8	0304-619	1	MOTOR,WIPER,85^
9	0310-495	10"	STRIP,LOCK
10	0304-674	1	SEAL,WINDOW,10FT
11	0402-243	1	ARM,WIPER,15-19"
12	0402-244	1	BLADE,FLAT,18"
13	0402-881	1	WINDOW,DOOR,RC,LH,RH
14	8102-040	7	CAPSCREW,HH,1/4-20 UNCx.75,GD8
15	8050-222	3	WASHER,WROUGHT,1/4,STD,ZN
16	8040-366	3	NUT,HEX,NYLOCK,1/4-20 UNC,ZN
17	0304-495	2	STUD,BALL,10MM
18	0304-484	11	TRIM,CAB RC-30
19	0304-491	1	MNT,SHOCK
20	8102-143	2	CAPSCREW,HH,5/16-18UNC3.5,GD8
21	0402-620	1	ASSY,WLMT,DOOR
22	0304-483	1	HANDLE,CAB
23	0304-485	2	SCREW,MACH,10-24x3/4,STAINLESS
24	8040-246	8	NUT,HEX,NYLOCK,10-24 UNC,ZN
25	0304-482	1	LOCK,CAB
26	0304-381	8	SCREW,MACH,PH PAN HD 10-24X0.5
27	0301-609	2	NUT,LOCK,STAR WASHER,#10-24NC
28	0304-512	1	MNT,SENSOR,LOADER
29	0304-574	1	HARNESS,DOOR
30	0304-488	1	PLATE,STRIKER
31	0304-573	1	HARNESS,WIPER,B
32	0304-489	1	SPRING,GAS
33	0310-587	2	CLAMP,WIRE,3/8,ADHESIVE
34	0304-391	4	NUT,HEX,NYLOK1/4-20,INSERT/CAP
35	0304-646	1	PLATE,TOP
36	0301-033	8	WASHER,FENDER,1/4 x 1 1/4,STL,
37	0402-883	1	LOCK,CAB,W/INSIDE HANDLE
38	0201-748	2	ASSY,TAG,EMERGENCY EXIT
39	0310-495	7"	STRIP,LOCK
40	1059-015	7	SEAL,WINDOW
41	0200-298	1	WINDOW,REAR
42	0402-758	1	GLASS,SLIDER,SINGLE,LH
43	0402-761	1	GLASS,UPPER,LH
44	0402-763	1	GLASS,LOWER,LH
45	0402-826	24	KIT,RETAINER,WINDOW
46	8102-128	2	CAPSCREW,HH 5/16-18UNCx7/8 GR8
47	8051-242	2	WASHER,SPRING LOCK,5/16,ZN
48	8050-262	2	WASHER,WROUGHT,5/16,STD,ZN
49	0200-345	1	SEAL,WINDOW,72"
50	0200-552	1	MNT,BRACKET,BALLSTUD
51	0200-324	1	STOP,WINDOW
52	0200-297	1	FRAME,WINDOW,REAR
53	0307-779	2	HINGE,DETACHABLE
54	0200-301	2	LATCH,COMPRESSION,1/4 TURN
55	8061-604	4	RIVET,ALUMINUM,3/16x.575
56	0310-641	1	MOUNT,SHOCK,90^
57	0200-232	2	SPRING,GAS ASSIST
58	0200-552	1	MNT,BRACKET,BALLSTUD
59	0200-545	2	CLIP,SAFETY,GAS SPRING
60	0402-932	1	BRACKET,SWITCH
61	0402-889	1	WLMT,DOOR,W/HINGES
62	0402-878	2	HINGE,MALE
63	0402-876	2	MNT,SENSOR,DOOR,LH

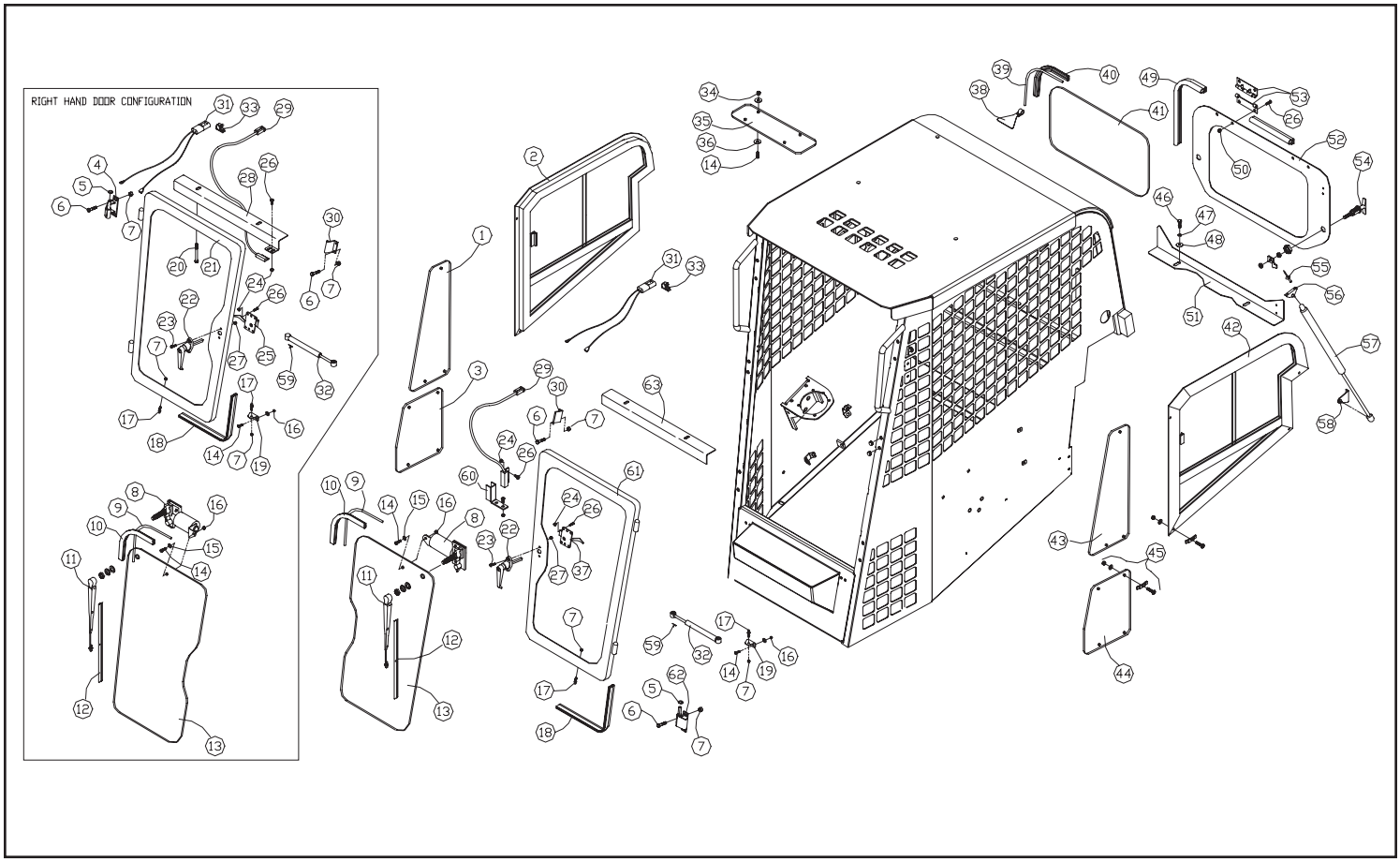

CHASSIS ASSEMBLY (SN: RSC 00101-2285)

REF. NO.	PART NUMBER	QTY.	DESCRIPTION
1	0200-217	1	MAT,FLOOR,50 SERIES.
2	0304-045	1	SEAT
3	0304-248	1	BELT,SEAT 2" RETRACTABLE
4	0304-662	1	HARNESS,SWITCH,SEAT
5	8102-404	10	CAPSCREW,HH 1/2-13UNCx1.25 GD8
6	8040-606	23	NUT,HEX,NYLOCK,1/2-13 UNC,ZN
7	8102-042	5	CAPSCREW, HH 1/4-20UNC 1" GD8
8	0304-206	1	WLMT,MNT,SEAT,REAR
9	8040-486	4	NUT,HEX,NYLOCK,3/8-16 UNC,ZN
10	0304-201	1	MNT,SEAT,FRAME
11	8102-130	4	CAPSCREW,HH 5/16-18x3/4,GR8
12	0300-732	6	CLAMP,HOSE,#4
13	0200-361	1	HOSE,FUEL,3/16IDx35.00"
14	0200-353	1	HOSE,FUEL,5/16IDx30.00"
15	0304-600	1	ASSY,UNIT,SENDING,FUEL
16	0304-447	1	HOSE,7/16X5/16POLY,1.30FT
17	0301-375	1	WEIGHT,IN-TANK
18	0200-139	1	PLATE, SKID, REAR
19	8050-262	26	WASHER,WROUGHT,5/16,STD,ZN
20	0304-509	1	HOSE,FUEL,5/16x26"
21	0300-686	2	CLAMP,HOSE,2.0,#32
22	0304-037	1	HOSE,FILL,DIESEL,FUEL
23	0304-315	1	DECAL,CONTROL,LIFT ARM
24	0310-139	2	FILM-DANGER (LOADER) (CRUSHER)
25	0200-138	1	DECAL,FENDER,REAR,RH
26	0200-135	1	WLMT,TANK,FUEL
27	0200-307	1	PLATE,FILLER,FLOOR
28	0200-134	1	PLATE,SKID,FRONT
29	8102-222	24	CAPSCREW,HH,3/8-16 UNCx1.0,GD8
30	8051-272	24	WASHER,SPRING LOCK,3/8,ZN
31	0200-050	1	WLMT,CHASSIS
32	0304-723	1	CLIP, HAIRPIN, .018 X 3.50
33	0304-316	1	DECAL,CONTROL,DRIVE
34	8040-426	1	NUT,HEX,NYLOCK,5/16-18 UNC,ZN
35	0304-401	1	BUMPER,STUD,MNT
36	0304-425	1	SPRING,LOADER LOCK
37	0200-080	1	WLMT,LOCKOUT,LOADER
38	8102-413	1	CAPSCREW,HH,1/2-13 UNCx3.5,GD8
39	0200-137	1	DECAL,FENDER,REAR,LH
40	0304-313	1	DECAL,WARNING,LOADER LOCK
41	0200-271	3	DECAL,R-SERIES
42	0200-179	1	PLATE,SKID,CENTER
43	0300-407	2	DECAL,TRACK,WARNING
44	0301-416	1	DECAL,FUEL-ONLY,DIESEL
45	0200-006	1	WLMT,FILLER NECK,FUEL
46	8102-040	7	CAPSCREW,HH,1/4-20 UNCx.75,GD8
47	0200-140	1	SCREEN,BACK,CHASSIS
48	0310-516	1	CAP,FILLER,HOSE
49	8040-366	4	NUT,HEX,NYLOCK,1/4-20 UNC,ZN
50	0304-515	1	SWITCH,SEAT
51	8051-212	10	WASHER,SPRING LOCK,1/4,ZN
52	0200-105	1	PLATE,ENGINE,SURROUND
53	0200-235	1	WEIGHT,REAR
54	0200-167	2	WEIGHT
55	8102-414	4	CAPSCREW,HH,1/2-13UNCx4.0,GD8,
56	8050-347	8	WASHER,WROUGHT,1/2,STD,ZN
57	8102-407	4	CAPSCREW,HH,1/2-13UNCx2.0,GD8,
58	0200-270	2	DECAL,POSI-TRACK,R-SERIES
59	8050-222	5	WASHER,WROUGHT,1/4,STD,ZN
60	0310-423	2	PLUG,STEEL,3.00"
61	0200-437	2	PLUG,HOLE,6"
62	0304-617	1	GASKET,TANK,FUEL
63	0304-157	6	SCREW,ORING,3/16-32x1/2,STAINL
64	8102-039	1	CAPSCREW,HH,1/4-20UNC X .625,GD8
65	2030-109	2	WEIGHT,REAR,SIDE
66	8050-348	8	WASHER,1/2.SAE,ZN
67	8051-332	8	WASHER,SPRING LOCK,1/2,ZN
68	8051-407	8	CAPSCREW,HH,1/2-13UNCX2.0,GD8
69	0314-032	4	PLATE,LIFT,FRONT
70	2030-190	4	BOLT,PLOW,1/2-13x1.50
71	0201-066	2	PLATE,BOLT
72	8040-606	4	NUT,HEX,NYLOCK,1/2-13 UNC,ZN

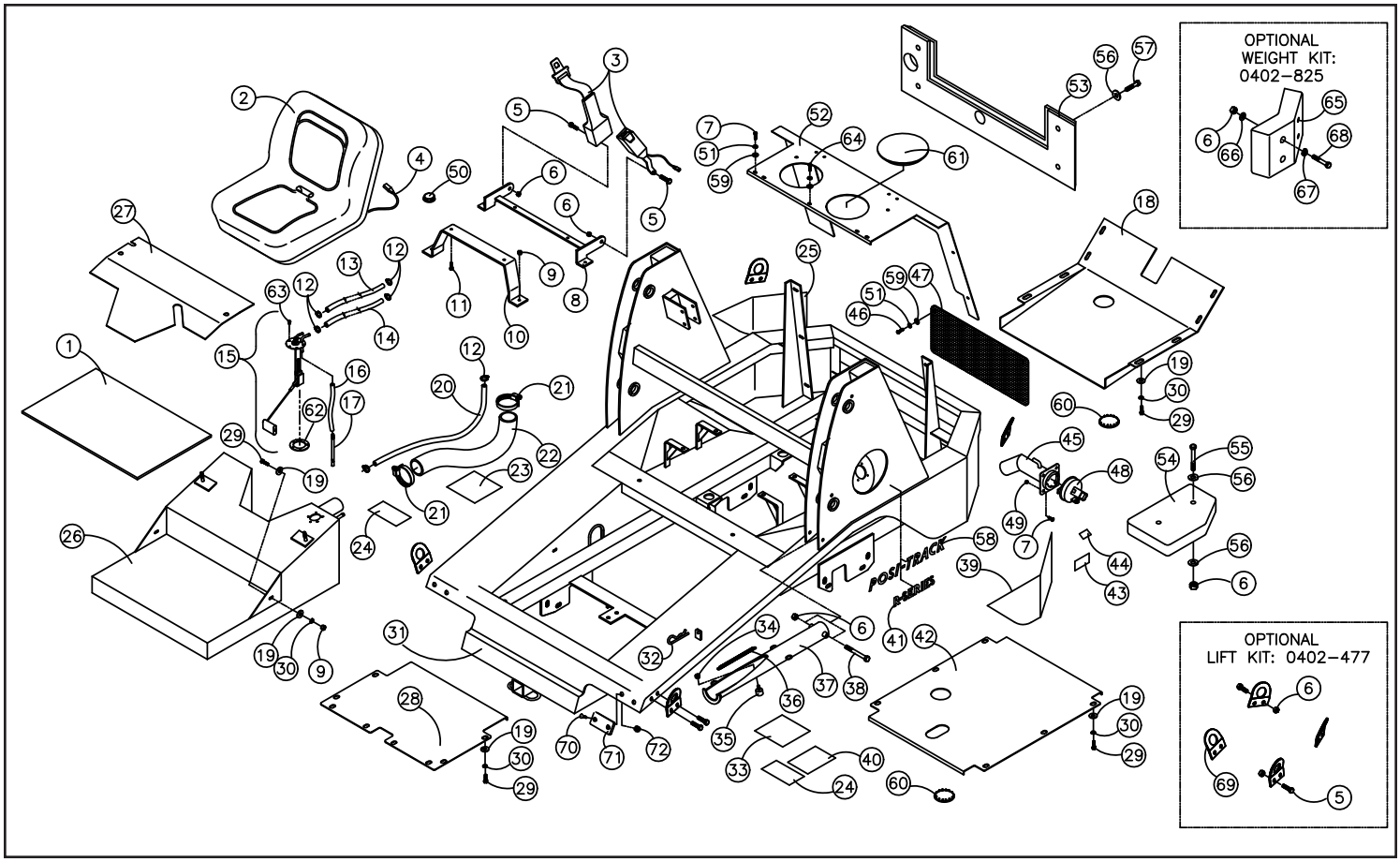

CHASSIS ASSEMBLY (SN: RSC 02286-Current)

REF. NO.	PART NUMBER	QTY.	DESCRIPTION
1	0200-217	1	MAT,FLOOR,50 SERIES.
2	0304-045	1	SEAT
3	0304-248	1	BELT,SEAT 2" RETRACTABLE
4	8050-222	5	WASHER,WROUGHT,1/4,STD,ZN
5	8102-404	10	CAPSCREW,HH 1/2-13UNCx1.25 GD8
6	8040-606	23	NUT,HEX,NYLOCK,1/2-13 UNC,ZN
7	8102-042	5	CAPSCREW, HH 1/4-20UNC 1" GD8
8	0304-206	1	WLMT,MNT,SEAT,REAR
9	8040-486	4	NUT,HEX,NYLOCK,3/8-16 UNC,ZN
10	0304-201	1	MNT,SEAT,FRAME
11	8102-130	4	CAPSCREW,HH 5/16-18x3/4,GR8
12	0300-732	6	CLAMP,HOSE,#4
13	0200-361	1	HOSE,FUEL,3/16IDx35.00"
14	0200-353	1	HOSE,FUEL,5/16IDx30.00"
15	0304-600	1	ASSY,UNIT,SENDING,FUEL
16	0304-447	1	HOSE,7/16X5/16POLY,1.30FT
17	0301-375	1	WEIGHT,IN-TANK
18	0200-139	1	PLATE, SKID, REAR
19	8050-262	26	WASHER,WROUGHT,5/16,STD,ZN
20	0304-509	1	HOSE,FUEL,5/16x26"
21	0300-686	2	CLAMP,HOSE,2.0,#32
22	0304-037	1	HOSE,FILL,DIESEL,FUEL
23	2030-188	2	FOAM,LOADER LOCK,15 1/2"
24	0310-139	2	FILM-DANGER (LOADER) (CRUSHER)
25	0200-138	1	DECAL,FENDER,REAR,RH
26	0200-135	1	WLMT,TANK,FUEL
27	0200-307	1	PLATE,FILLER,FLOOR
28	0200-134	1	PLATE,SKID,FRONT
29	8102-222	24	CAPSCREW,HH,3/8-16 UNCx1.0,GD8
30	8051-272	24	WASHER,SPRING LOCK,3/8,ZN
31	2030-082	1	WLMT,CHASSIS,RC60
32	2030-154	1	WLMT,LOCK,LOADER
33	0314-032	4	PLATE,LIFT,FRONT
34	0201-477	1	PIN,LOCKING,D-RING,3.00"
35	2030-109	2	WEIGHT,REAR,SIDE
36	0201-752	1	DECAL,BRACE,FENDER
37	0310-423	2	PLUG,STEEL,3.00"
38	8102-406	8	CAPSCREW,HH,1/2-13UNCx1.75,GD8
39	0200-137	1	DECAL,FENDER,REAR,LH
40	0304-313	1	DECAL,WARNING,LOADER LOCK

REF. NO.	PART NUMBER	QTY.	DESCRIPTION
41	0200-271	3	DECAL,R-SERIES
42	0200-179	1	PLATE,SKID,CENTER
43	0300-407	2	DECAL,TRACK,WARNING
44	0301-416	1	DECAL,FUEL-ONLY,DIESEL
45	0200-272	1	DECAL,ASV LOGO
46	8102-040	7	CAPSCREW,HH,1/4-20 UNCx.75,GD8
47	0200-140	1	SCREEN,BACK,CHASSIS
48	0310-516	1	CAP,FILLER,HOSE
49	0200-270	2	DECAL,POSI-TRACK,R-SERIES
50	8102-410	4	CAPSCREW,HH 1/2-13UNCx2.75 GD8
51	8051-212	10	WASHER,SPRING LOCK,1/4,ZN
52	0200-105	1	PLATE,ENGINE,SURROUND
53	0200-235	1	WEIGHT,REAR
54	0200-167	4	WEIGHT
55	8102-416	4	CAPSCREW HH 1/2-13 x 5 GD 8
56	8050-347	24	WASHER,WROUGHT,1/2,STD,ZN
57	0310-423	2	PLUG,STEEL,3.00"PLUG,STEEL,3.00"
58	0304-157	6	SCREW,ORING,3/16-32x1/2
59	0304-662	1	HARNESS,SWITCH,SEAT
60	2010-127	1	SWITCH,SEAT (TWIST IN STYLE)
61	0304-617	1	GASKET,TANK,FUEL
62	0200-437	2	PLUG,HOLE,6"
63	2030-190	4	BOLT,PLOW,1/2-13x1.50
64	0201-066	2	PLATE,BOLT
65	8040-606	4	NUT,HEX,NYLOCK,1/2-13 UNC,ZN

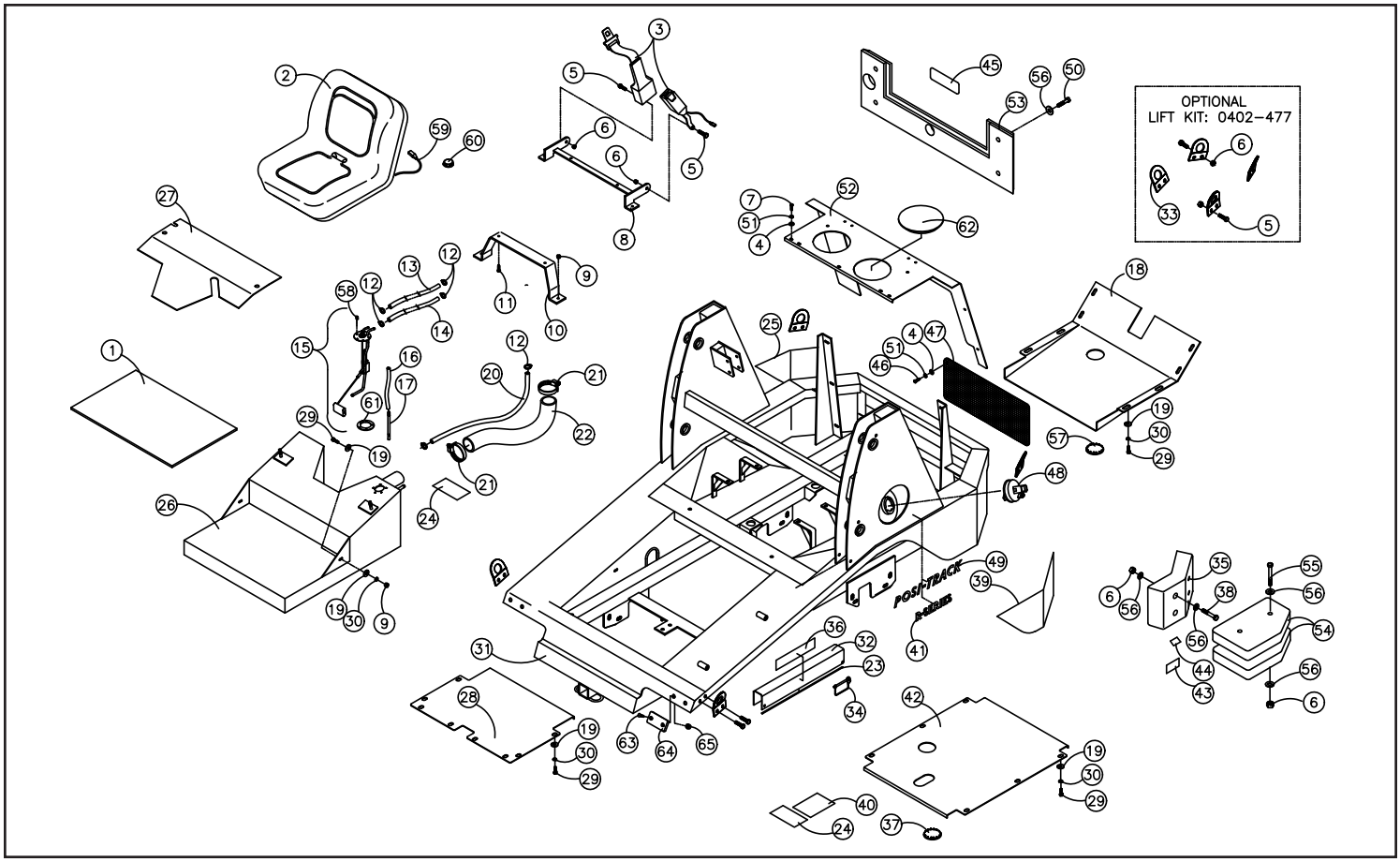

HOOD ASSEMBLY (SN: RSC 00101-Current)

REF. NO.	PART NUMBER	QTY.	DESCRIPTION
1	0200-141	1	DECAL,HOOD,SIDE,LH
2	0200-143	1	SCREEN,HOOD,TOP
3	0200-144	1	TRIM,SCREEN,TOP
4	0200-146	1	TRIM,SEAL,HOOD
5	0200-145	1	HOOD,RC-50
6	8060-211	65	RIVET,BLIND,ALUM,0.125 x 0.75,
7	0200-150	1	TRIM,HOOD,SCREEN,REAR
8	0200-149	1	SCREEN,HOOD,REAR
9	0302-042	2	LATCH,RUBBER,T-HANDLE
10	8060-688	4	RIVET,BLIND,3/16 x .375 ABA
11	0302-965	4	WASHER,RIVET,#7
12	0200-142	1	DECAL,SIDE,HOOD,RH
13	0200-148	2	TRIM,HOOD,SIDE
14	0200-147	2	SCREEN,HOOD,SIDE
15	0200-232	2	SPRING,GAS ASSIST
16	0310-641	2	MOUNT,SHOCK,90^
17	0200-289	2	WLMT,MNT,BRACKET,BALL STUD
18	8040-366	4	NUT,HEX,NYLOCK,1/4-20 UNC,ZN
19	8050-222	4	WASHER,WROUGHT,1/4,STD,ZN
20	0310-648	4	SCREW,MACH,1/4-20UNCx1.25
21	0310-640	2	HINGE,HOOD
22	8060-731	8	RIVET,STAINLESS,3/16x.575
23	8060-731	4	RIVET,ALUMINUM,3/16x.575
24	0200-366	1	TRIM,SEAL,HOOD

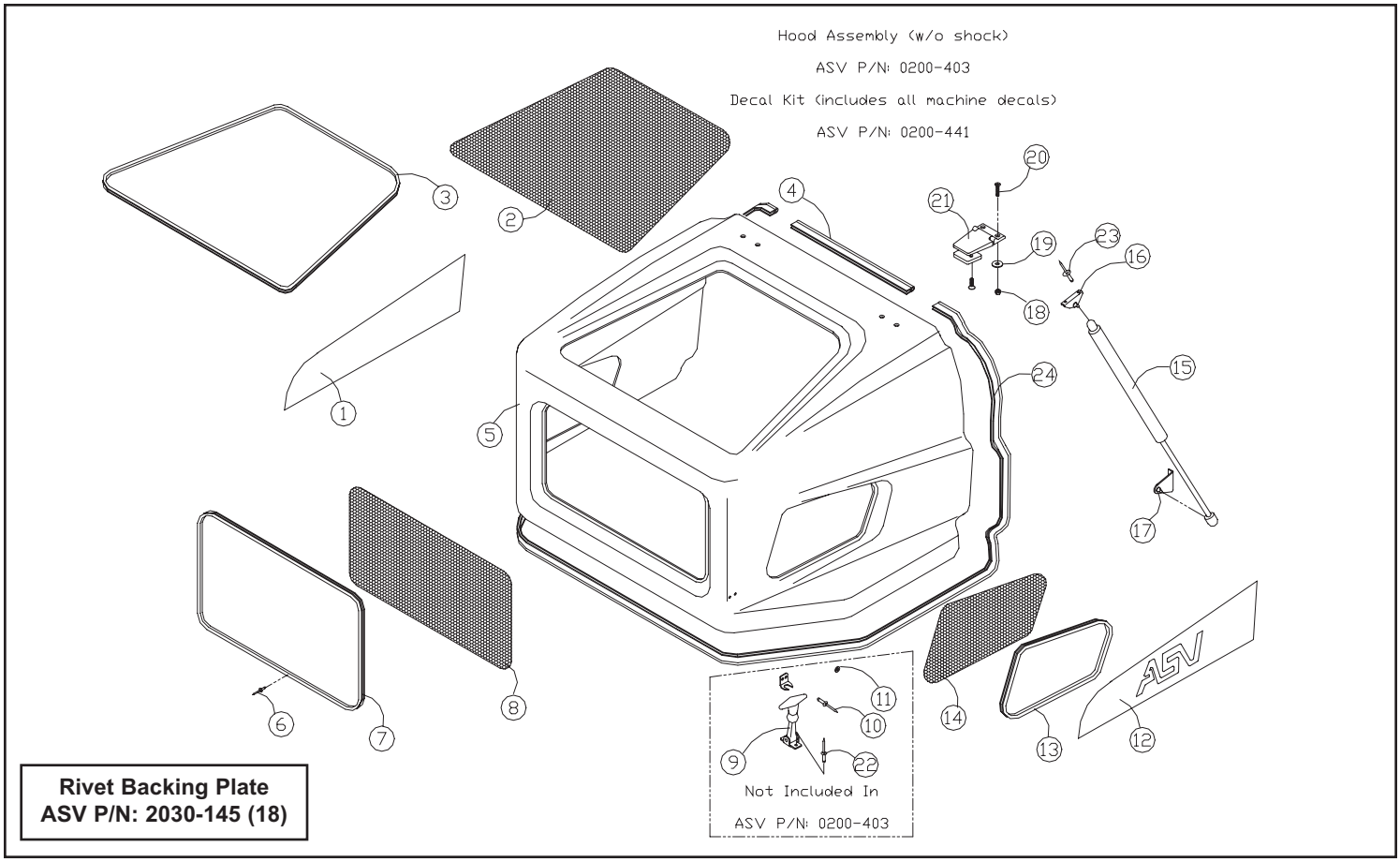

RADIATOR/OIL COOLER ASSEMBLY (SN: RSC 00101-2285)

REF. NO.	PART NUMBER	QTY.	DESCRIPTION
1	0200-336	4	CAPSCREW,HH,M6x1.0x40
2	8102-040	11	CAPSCREW,HH,1/4-20 UNCx.75,GD8
3	8051-212	11	WASHER,SPRING LOCK,1/4,ZN
4	8050-222	11	WASHER,WROUGHT,1/4,STD,ZN
5	0200-226	1	GUARD,FAN,RH
6	0200-225	1	GUARD,FAN,LH
7	0200-103	1	FAN,ENGINE,17"
8	0304-035	1	HOSE,RADIATOR,TOP
9	0300-686	4	CLAMP,HOSE,2.0,#32
10	8040-366	11	NUT,HEX,NYLOCK,1/4-20 UNC,ZN
11	0310-202	1	DECAL,WARNING,RADIATOR
12	0200-358	1	CAP,RADIATOR,7PSI
13	8060-728	8	RIVET,BLIND3/16X.550 1Y SSB66S
14	0304-444	1	HOSE,7/16 x 5/16 POLY,3FT
15	0200-086	1	ASSY,COOLER
16	0300-289	2	ADAPTER,O-RING TO FLARE (16-12
17	0200-087	1	SHROUD,FAN
18	0304-036	1	HOSE,RADIATOR,BOTTOM
19	0200-107	1	MNT,SHROUD,RH
20	0200-106	1	MNT,SHROUD,LH
21	0200-152	1	SPACER,FAN,3024C (W/O AIR CONDITIONING)
22	8102-224	6	CAPSCREW,HH,3/8-16UNCx1.25,GD8
23	8050-262	12	WASHER,WROUGHT,5/16,STD,ZN
24	8040-486	6	NUT,HEX,NYLOCK,3/8-16 UNC,ZN
25	0302-965	8	WASHER,RIVET,#7
26	0307-439	2	ADAPTER,PLUG,8MB
27	0200-360	1	SEAL,SHROUD,BOTTOM
28	0200-359	1	SEAL,SHROUD,TOP
29	0304-150	1	HOSE,12C2AT,3100PSI,64"
30	0304-151	1	HOSE,12C2AT,3100PSI,45"

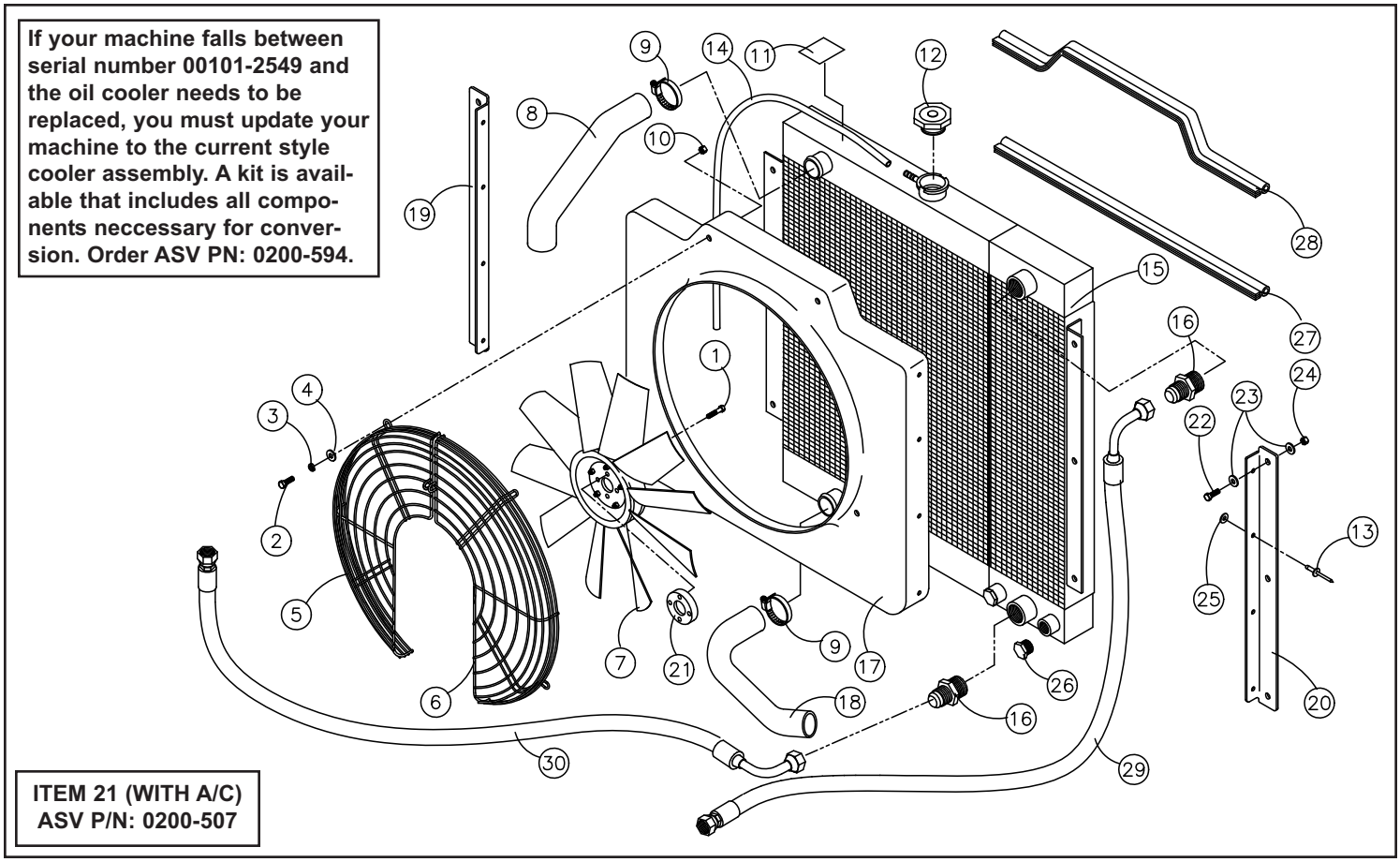

RADIATOR/OIL COOLER ASSEMBLY (SN: RSC 02286-2549)

REF. NO.	PART NUMBER	QTY.	DESCRIPTION
1	0200-336	4	CAPSCREW,HH,M6x1.0x40
2	8102-040	11	CAPSCREW,HH,1/4-20 UNCx.75,GD8
3	8051-212	11	WASHER,SPRING LOCK,1/4,ZN
4	8050-222	11	WASHER,WROUGHT,1/4,STD,ZN
5	0200-226	1	GUARD,FANRH
6	0200-225	1	GUARD,FAN,LH
7	0200-103	1	FAN,ENGINE,17"
8	0304-035	1	HOSE,RADIATOR,TOP
9	0300-686	4	CLAMP,HOSE,2.0,#32
10	8040-366	5	NUT,1/4-20UNC,NYLOK
11	0310-202	1	DECAL,WARNING,RADIATOR
12	0200-358	1	CAP,RADIATOR,7PSI
13	8060-728	8	RIVET,BLIND3/16X.550 1Y SSB66S
14	0304-444	1	HOSE,7/16 x 5/16 POLY,3FT
15	0200-086	1	ASSY,COOLER
16	2030-097	2	ADAPTER,FS6400-12-16-0
17	0200-087	1	SHROUD,3024cT
18	0304-036	1	HOSE,RADIATOR,BOTTOM
19	2030-117	1	MNT,SHROUD,RH
20	2030-116	1	MNT,SHROUD,LH
21	0200-152	1	SPACER,FAN,3024C (W/O AIR CONDITIONING)
22	8102-224	6	CAPSCREW,HH,3/8-16UNCx1.25,GD8
23	8050-262	12	WASHER,WROUGHT,5/16,STD,ZN
24	8040-486	6	NUT,HEX,NYLOCK,3/8-16 UNC,ZN
25	0302-965	8	WASHER,RIVET,#7
26	0307-439	2	ADAPTER,PLUG,8MB
27	0200-360	1	SEAL,SHROUD,BOTTOM
28	0200-359	1	SEAL,SHROUD,TOP
29	2030-079	1	HOSE,12G1,12FFORX90S,12FFORX,6
30	2030-078	1	HOSE,12G1,12FFORX90S,12FFORX90

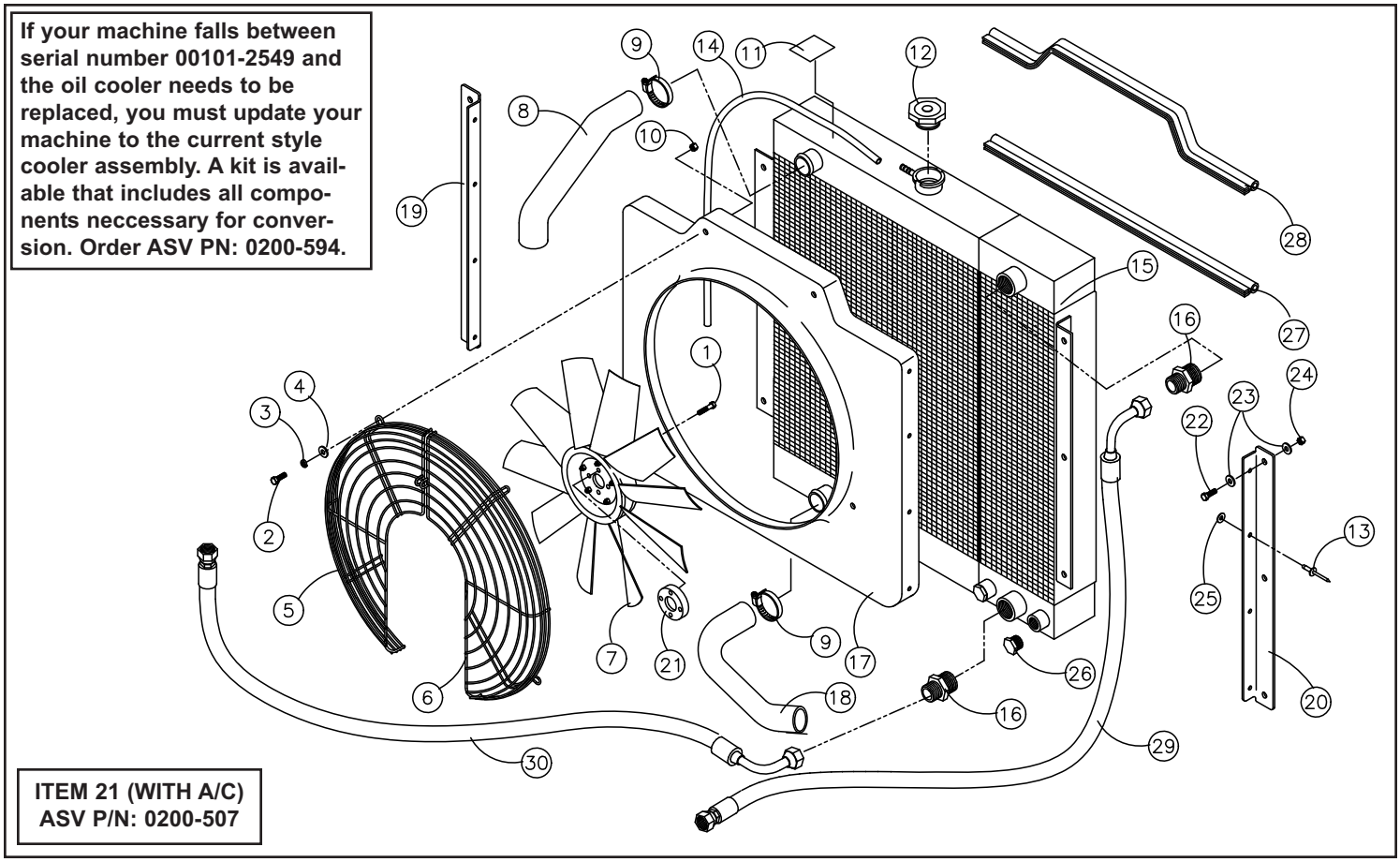

RADIATOR/OIL COOLER ASSEMBLY (SN: RSC 02550-Current)

REF. NO.	PART NUMBER	QTY.	DESCRIPTION
1	0200-336	4	CAPSCREW,HH,M6x1.0x40
2	8102-040	11	CAPSCREW,HH,1/4-20 UNCx.75,GD8
3	8051-212	11	WASHER,SPRING LOCK,1/4,ZN
4	8050-222	11	WASHER,WROUGHT,1/4,STD,ZN
5	0200-226	1	GUARD,FANRH
6	0200-225	1	GUARD,FAN,LH
7	0200-103	1	FAN,ENGINE,17"
8	0304-035	1	HOSE,RADIATOR,TOP
9	0300-686	4	CLAMP,HOSE,2.0,#32
10	8040-366	5	NUT,1/4-20UNC,NYLOK
11	0310-202	1	DECAL,WARNING,RADIATOR
12	0200-358	1	CAP,RADIATOR,7PSI
13	8060-728	8	RIVET,BLIND3/16X.550 1Y SSB66S
14	0304-444	1	HOSE,7/16 x 5/16 POLY,3FT
15	0200-492	1	ASSY,COOLER
16	2030-097	2	ADAPTER,FS6400-12-16-0
17	2030-040	1	SHROUD,3024cT
18	0304-036	1	HOSE,RADIATOR,BOTTOM
19	2030-117	1	MNT,SHROUD,RH
20	2030-116	1	MNT,SHROUD,LH
21	0200-152	1	SPACER,FAN,3024C (W/O AIR CONDITIONING)
22	8102-224	6	CAPSCREW,HH,3/8-16UNCx1.25,GD8
23	8050-262	12	WASHER,WROUGHT,5/16,STD,ZN
24	8040-486	6	NUT,HEX,NYLOCK,3/8-16 UNC,ZN
25	0302-965	8	WASHER,RIVET,#7
26	0307-439	2	ADAPTER,PLUG,8MB
27	0200-360	1	SEAL,SHROUD,BOTTOM
28	0200-359	1	SEAL,SHROUD,TOP
29	2030-079	1	HOSE,12G1,12FFORX90S,12FFORX,6
30	2030-078	1	HOSE,12G1,12FFORX90S,12FFORX90

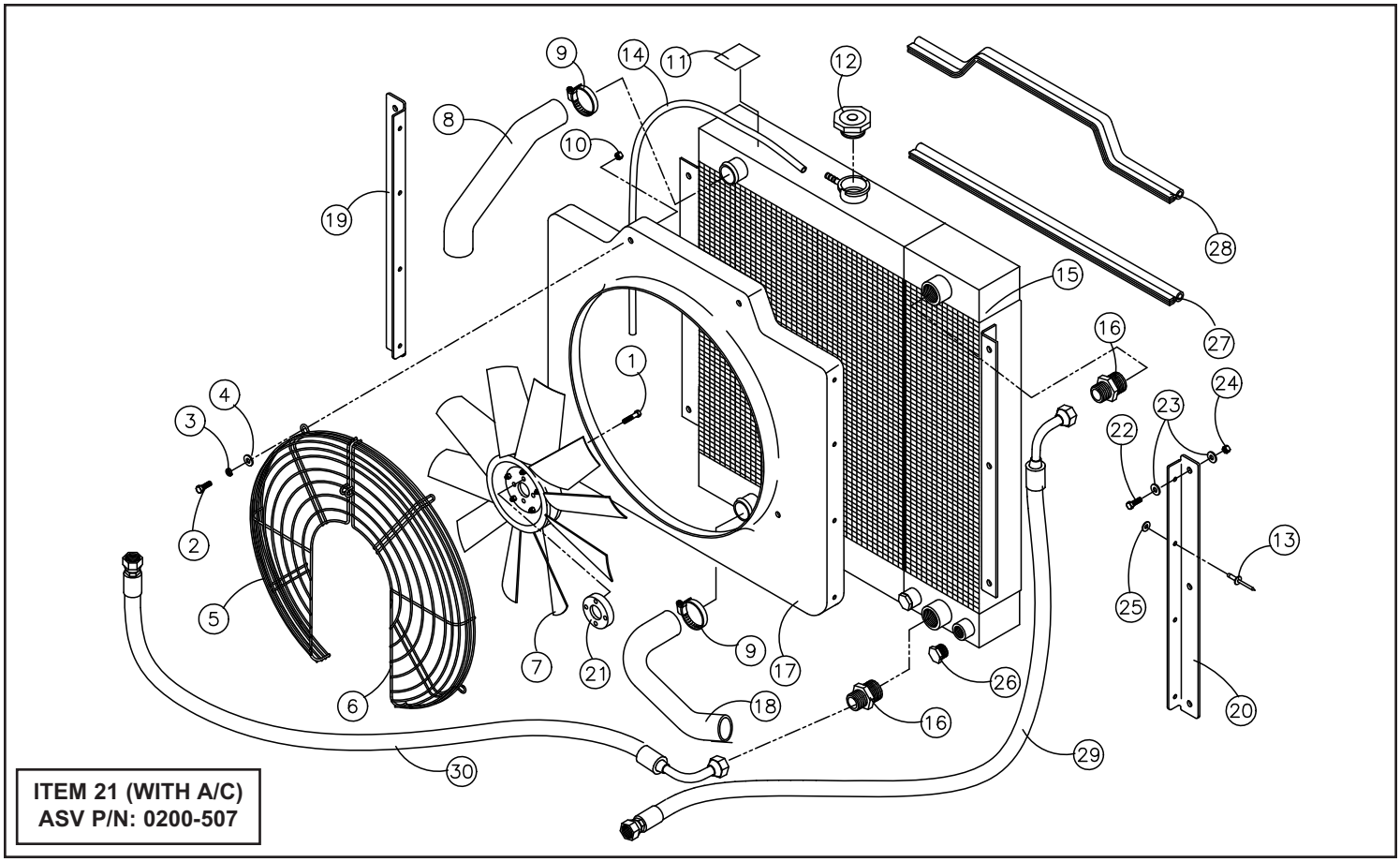

HYDRAULIC RESERVOIR ASSEMBLY (SN: RSC 00101-2285)

REF. NO.	PART NUMBER	QTY.	DESCRIPTION
1	0300-190	1	SCREEN,SUCTION
2	0304-450	1	VALVE,RELIEF,RES.
3	0304-832	1	CAP,SLOSH PROOF,0 PSI
4	0304-452	1	ASSY,COVER,ACCESS
5	0200-203	1	ASSY,FILTER,HYD,4-BOLT
6	0200-204	1	ELEMENT,FILTER,MP
7	0304-642	1	GAUGE,SIGHT 5"
8	0307-879	1	SWITCH,TEMP,OIL,225^ F
9	8102-134	1	CAPSCREW,HH,5/16-18UNCx1.25GD8
10	8102-132	3	CAPSCREW,HH,5/16-18UNCx1.0 GD8
11	8040-426	4	NUT,HEX,NYLOCK,5/16-18 UNC,ZN
12	0302-713	1	ADAPTER,O-RING TO FLARE (4-6)
13	0200-201	1	RESERVOIR
14	0304-384	2	CLAMP,HOSE # 16
15	0304-442	1	HOSE,RES.
16	0200-325	1	O-RING,FILTER CAP
17	2030-093	1	ADAPTER,FS6804-06-06-06-NWO
18	0200-221	1	GASKET,COVER,ACCESS
19	8104-132	4	CAPSCREW,HH 5/16-24UNFx 1 GD 8

ITEM 16 INCLUDES ALL IDENTIFIED O–RINGS

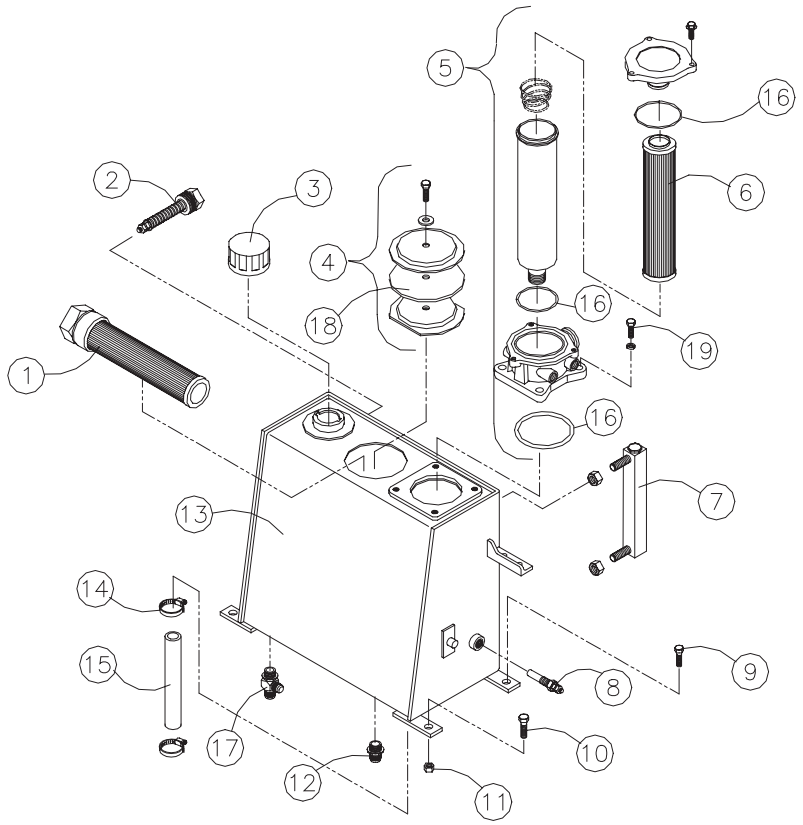

HYDRAULIC RESERVOIR ASSEMBLY (SN: RSC 02286-Current)

REF. NO.	PART NUMBER	QTY.	DESCRIPTION
1	0300-190	1	SCREEN,SUCTION
2	0304-450	1	VALVE,RELIEF,RES.
3	0304-832	1	CAP,SLOSH PROOF,0 PSI
4	0304-452	1	ASSY,COVER,ACCESS
5	0200-203	1	ASSY,FILTER,HYD,4-BOLT
6	0200-204	1	ELEMENT,FILTER,MP
7	0304-642	1	GAUGE,SIGHT 5"
8	0307-879	1	SWITCH,TEMP,OIL,225^ F
9	8102-134	1	CAPSCREW,HH,5/16-18UNCx1.25GD8
10	8102-132	3	CAPSCREW,HH,5/16-18UNCx1.0 GD8
11	8040-426	4	NUT,HEX,NYLOCK,5/16-18 UNC,ZN
12	0302-713	1	ADAPTER,O-RING TO FLARE (4-6)
13	2030-066	1	RESERVOIR
14	0304-384	2	CLAMP,HOSE # 16
15	0304-442	1	HOSE,RES.
16	0200-325	1	O-RING,FILTER CAP
17	2030-093	1	ADAPTER,FS6804-06-06-06-NWO
18	0200-221	1	GASKET,COVER,ACCESS
19	8104-132	4	CAPSCREW,HH 5/16-24UNFx 1 GD 8
20	0310-321	1	ADAPTER,12MFFOR-12MB90ADAPTER

ITEM 16 INCLUDES ALL IDENTIFIED O-RINGS

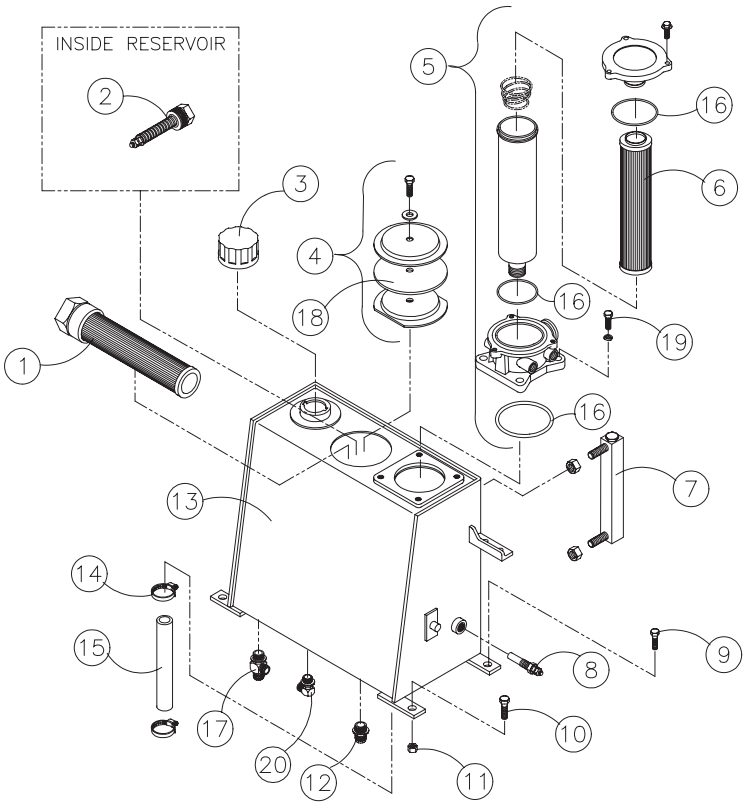

HYDRAULIC CONTROL ASSEMBLY (SN: RSC 00101-2285)

REF. NO.	PART NUMBER	QTY.	DESCRIPTION
1	0310-138	1	PLUG
2	0201-263	1	JOYSTICK,CONTROL,HANDLE,RH
3	0304-216	1	MNT,TUBE
4	0304-215	1	BRACKET
5	8102-222	2	CAPSCREW,HH,3/8-16 UNCx1.0,GD8
6	8104-040	8	CAPSCREW,HH 1/4-28UNFx .75 GD8
7	8040-396	8	NUT,HEX,NYLOCK,1/4-28 UNF,ZN
8	0307-882	2	TIE,CABLE,BLACK,18.1",W/STL IN
9	0304-272	1	ASSY,CONTROL,LINE D
10	0304-271	1	ASSY,CONTROL,LINE C
11	0304-137	2	ASSY,TUBE,VALVE,BOTTOM
12	0304-136	2	ASSY,TUBE,VALVE,TOP
13	0304-328	2	ADAPTER,90^,10MJ-8MB90
14	0300-288	2	ADAPTER,O-RING TO FLARE (8-8)
15	0300-291	2	ADAPTER,O-RING TO FLARE (10-8)
16	0301-397	1	ADAPTER,O-RING TO FLARE 90^
17	0302-713	18	ADAPTER,O-RING TO FLARE (4-6)
18	0304-383	1	ADAPTER,4MJ-6MB90
19	0300-294	1	ADAPTER,O-RING TO FLARE 90^
20	0304-020	1	VALVE,LOADER
21	0304-268	1	ASSY,CONTROL,HOSE
22	0304-270	1	ASSY,CONTROL,HOSE,B
23	0304-269	1	ASSY,CONTROL,LINE,B
24	0200-330	1	BRACKET,FILTER
25	0304-267	1	ASSY,CONTROL,LINE
26	0201-264	1	JOYSTICK,CONTROL,HANDLE,LH
27	0304-159	4	ADAPTER,4 ORING-4 FLARE,90
28	0304-088	1	TUBE,AUX,TOP
29	0304-089	1	TUBE,AUX,BTM
30	0304-395	2	CLAMP,PILOT LINES
31	0304-155	2	HOSE,4C2AT,5800PSI,41.50
32	0304-154	1	HOSE,4C2AT,5800PSI,51"
33	0304-153	1	HOSE,4C2AT,5800PSI,47"
34	0304-148	1	HOSE,4C2AT,5800PSI,48"
35	0304-152	2	HOSE,4C2AT,5800PSI,62"
36	0304-499	1	PLATE,STEERING
37	0200-183	1	HOSE,4M3K,3000 PSI,52"
38	0300-286	2	ADAPTER,O-RING TO FLARE (6-6)
39	0200-326	1	ADAPTER,TEST PORT,#4 BLK
40	0300-493	7	ADAPTER,O-RING TO FLARE (4-4)
41	0304-622	1	HOSE,4M3K,3000PSI,36.09
42	0304-498	1	PLATE,AUX.
43	8107-577	8	SCREW,PH,TH,1/4-20x1/2,ZN,GD8
44	0304-144	1	HOSE,C2AT,4000PSI,13.5"
45	0304-230	1	HOSE,8M4K,4000PSI,26
46	0304-231	1	HOSE,8M4K,4000PSI,28"
47	0118-165	2	SPOOL,SOLENOID,2POSITION,3WAY
48	0201-152	2	GRIP,CONTROL
49	0201-775	1	BOOT,JOYSTICK,RH
50	0304-516	1	MAGNET,DETENT
51	0201-774	1	BOOT,JOYSTICK,LH
52	0304-441	1	SWITCH,PRESSURE
53	0200-364	4	SOLENOID,W/DEUTSCH CONNECTOR
54	0118-164	1	SPOOL,SOLENOID,3POSITION,4WAY
55	0304-842	1	VALVE,ANTI-VOID
56	0201-557	1	VALVE,RELIEF,PORT,3000PSI
57	0304-186	1	PLUG,12 ORING,ALLEN HEAD

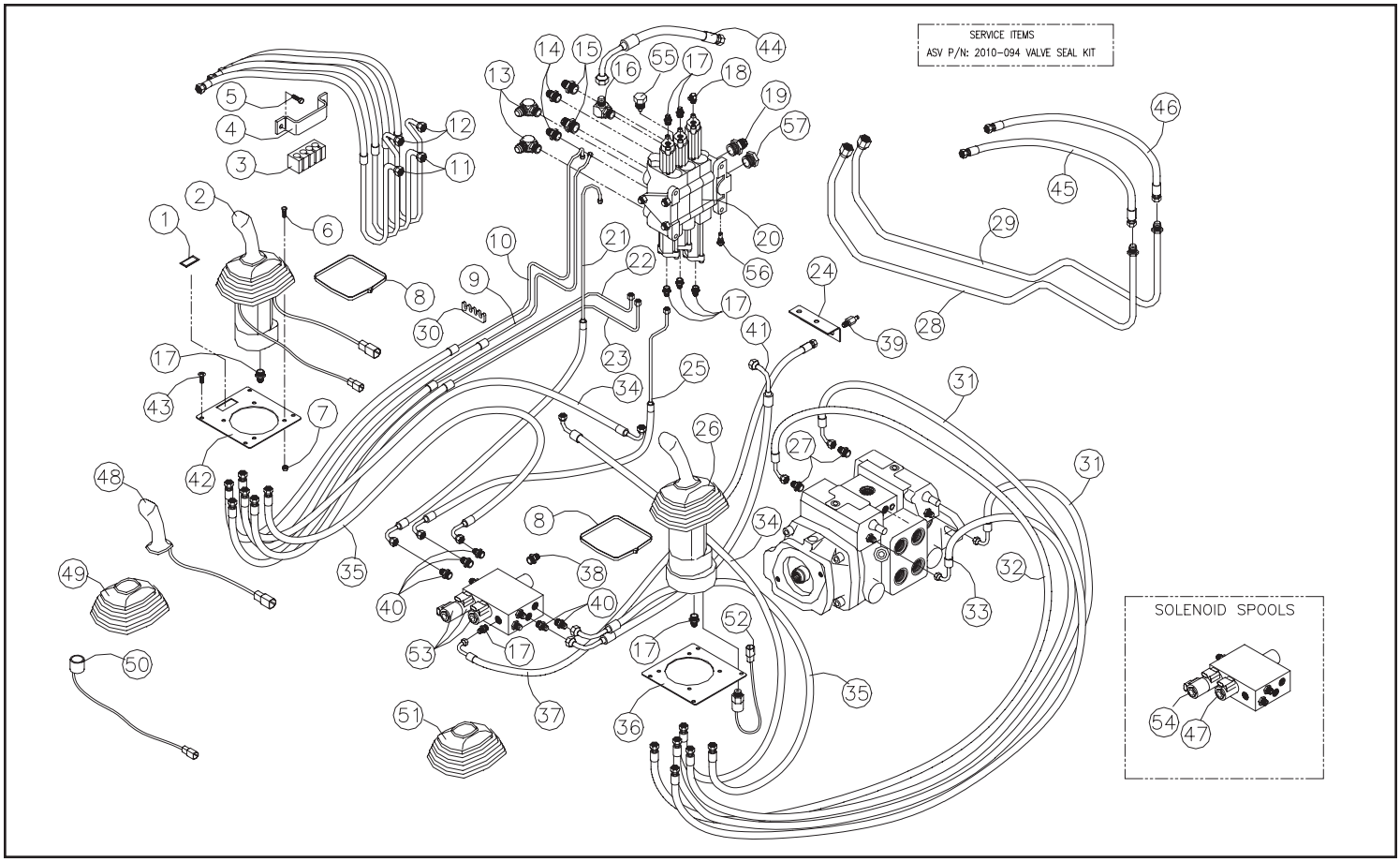

HYDRAULIC CONTROL ASSEMBLY (SN: RSC 02286-Current)

REF. NO.	PART NUMBER	QTY.	DESCRIPTION
1	0118-164	1	SPOOL,SOLENOID,3POSITION,4WAY
2	0201-263	1	ASSY,JOYSTICK,RH
3	0201-625	1	VALVE,SELF-LEVELING
4	2030-113	1	TUBE,LEVELER,FRONT
5	2030-111	1	TUBE,LEVELER,REAR
6	8104-040	8	CAPSCREW,HH 1/4-28UNFx .75 GD8
7	8040-396	8	NUT,HEX,NYLOCK,1/4-28 UNF,ZN
8	0307-882	2	TIE,CABLE,BLACK,18.1",W/STL IN
9	2030-062	1	ASSY,LINE,CONTROL,UP,LOADER
10	2030-059	1	ASSY,LINE,CONTROL,DUMP,BUCKET
11	2030-110	1	TUBE,BUCKET,LOWER,LEVELER
12	0201-311	8	ADAPTER,FS6400-04-04-0
13	0310-330	2	ADAPTER,10MFFOR-8MB-90
14	0201-658	2	ADAPTER,10MFFOR-8MB-S
15	0310-318	4	ADAPTER,10MFFOR-10MB
16	0310-313	1	ADAPTER,12MFFOR-12MB
17	0201-309	18	ADAPTER,FS6400-04-06-0
18	0201-319	1	ADAPTER,FS6801-04-06-NW0
19	0310-321	1	ADAPTER,12MFFOR-12MB90
20	0304-020	1	VALVE,LOADER
21	2030-067	1	ASSY,LINE,CONTROL,TOP,AUX
22	2030-057	1	ASSY,LINE,CONTROL,DOWN,LOADER
23	2030-055	1	ASSY,LINE,CONTROL,CURL,BUCKET
24	0200-330	1	BRACKET,FILTER
25	2030-064	1	ASSY,LINE,CONTROL,BOTTOM,AUX.
26	0201-264	1	ASSY,JOYSTICK,LH
27	0201-314	3	ADAPTER,FS6801-04-04-NW0
28	2030-004	1	TUBE,AUX,LOWER,VALVE
29	2030-003	1	TUBE,AUX,TOP,VALVE
30	0304-395	2	CLAMP,PILOT LINES
31	2030-052	1	HOSE,4G1,4FFORX90S,4FFORX,47.5
32	2030-050	1	HOSE,4G1,4FFORX,4FFORX,51.00"
33	2030-049	1	HOSE,4G1,4FFORX,4FFORX,47.00"
34	2030-054	1	HOSE,4G1,6FFORX90S,4FFORX,48.0
35	2030-053	2	HOSE,4G1,4FFORX90S,4FFORX,62.0
36	0310-339	2	ADAPTER,CAP,10FFOR
37	2030-048	1	HOSE,4G1,4FFORX90S,4FJX,52.00"
38	0310-329	2	ADAPTER,6MFFOR-6MB
39	0200-326	1	ADAPTER,TEST PORT,#4 BLK
40	0201-557	1	VALVE,RELIEF,PORT,3000PSI
41	2030-036	1	HOSE,4G1,4FFORX90M,6FFORX,36.0
42	0200-364	5	SOLENOID,W/DEUTSCH CONNECTOR
43	0118-165	2	SPOOL,SOLENOID,2POSITION,3WAY
44	2030-112	1	TUBE,BUCKET,UPPER,LEVELER
45	2030-051	1	HOSE,4G1,4FFORX90S,4FFORX,41.5
46	2030-071	2	HOSE,10M4K,10FFORX,10FFORX,22.
47	0304-441	1	SWITCH,PRESSURE
48	2030-103	1	TUBE,LEVELER,TOP
49	2030-118	1	TUBE,RETURN,VALVE
50	2030-005	1	TUBE,BOOM,LOWER,VALVE
51	2030-104	1	TUBE,BOOM,LEVELER
52	0201-668	2	ADAPTER,FF6801-10-10NWO
53	0201-152	2	GRIP,CONTROL
54	0201-775	1	BOOT,JOYSTICK,RH
55	0304-516	1	MAGNET,DETENT
56	0201-774	1	BOOT,JOYSTICK,LH
57	0304-842	1	VALVE,ANTI-VOID
58	2030-011	1	TUBE,BOOM,UPPER,VALVE

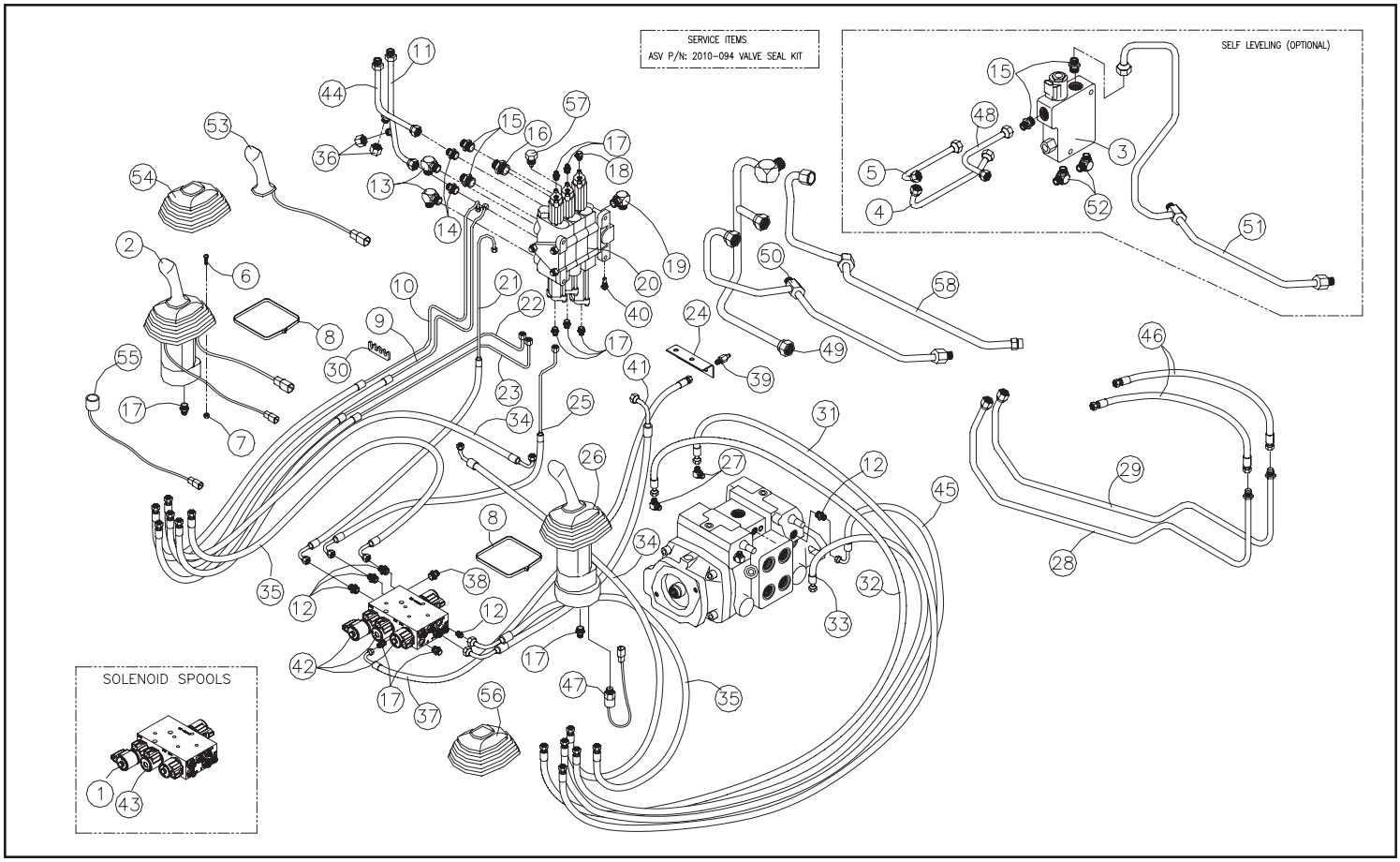

DRIVE/AUXILIARY PUMP ASSEMBLY (SN: RSC 00101-2285)

REF. NO.	PART NUMBER	QTY.	DESCRIPTION
1	0310-294	1	O-RING,#222,1.50x1.75x.13
2	0200-002	1	MANIFOLD,PILOT GENERATION
3	0300-286	3	ADAPTER,O-RING TO FLARE (6-6)
4	0200-191	2	HOSE,4G2,5800 PSI,32.5"
5	0200-259	1	HOSE,12G6K,6000 PSI,35.50"
6	0200-197	1	HOSE,12G6K,6000 PSI,31.5"
7	0200-194	1	HOSE,8M3K,3000 PSI,41"
8	0310-329	2	ADAPTER,6MFFOR-6MB
9	0200-195	1	HOSE,8M3K,3000 PSI,56.5"
10	0200-216	1	TUBE,HYD,CHARGE PRESSURE
11	0200-196	1	HOSE,12G6K,6000 PSI,44"
12	0200-198	1	HOSE,12G6K,6000 PSI,47"
13	0300-291	1	ADAPTER,O-RING TO FLARE (10-8)
14	0200-172	1	COUPLING,SPLIT,CODE 61,0.75"
15	0300-288	1	ADAPTER,O-RING TO FLARE (8-8)
16	0300-294	2	ADAPTER,O-RING TO FLARE 90^ (1
17	0200-104	1	HUB,PUMP DRIVE,1 1/4" x 14 TOO
18	2045-998	1	PUMP,TANDEM,TRANSMISSION
19	0200-253	2	ADAPTER,12MB O-RING,12MJ,90^ L
20	0200-123	1	MANIFOLD,RES
21	0200-193	1	HOSE,12M4K,4000 PSI,37"
22	0200-192	1	HOSE,6G2,4800 PSI,41.5"
23	0200-342	1	HOSE,INTAKE,1.50"IDx10.50"
24	0300-687	4	CLAMP,HOSE,1.5,#24
25	0200-355	1	ADAPTER,SPLINE
26	0307-169	1	O-RING,AUXILIARY PUMP
27	0200-124	1	TUBE,INTAKE,RC 50
28	0200-171	1	COUPLING,SPLIT,CODE 61,1.25"
29	0200-119	1	PUMP,HYD,AUX
30	8051-272	2	WASHER,SPRING LOCK,3/8,ZN
31	0304-227	1	HOSE,6C2AT,4800PSI,23"
32	0310-468	8	CAPSCREW,HH,M10x1.5x35,ZINC PL
33	0301-781	8	WASHER,SPLIT LOCK,10mm,ZN
34	8102-222	2	CAPSCREW,HH,3/8-16 UNCx1.0,GD8
35	0201-558	1	O-RING,0.984IDx0.139CS
36	0403-001	4	O-RING VALVE RELIEF
37	0403-002	4	O-RING BACK-UP VALVE RELIEF
38	0201-876	4	VALVE,RELIEF,5500 PSI
39	0403-100	1	RELIEF POSI POWER

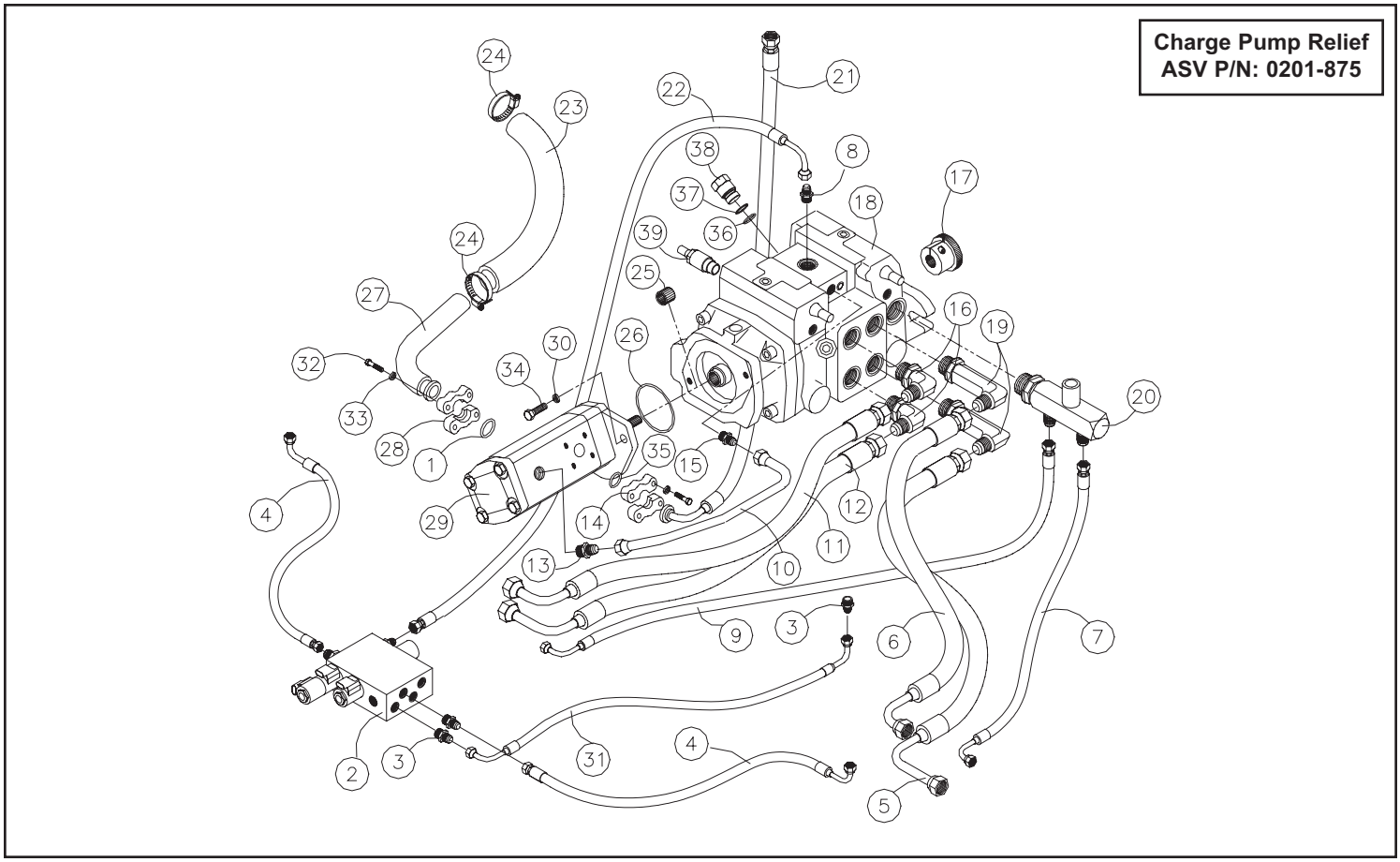

DRIVE/AUXILIARY PUMP ASSEMBLY (SN: RSC 02286-Current)

REF. NO.	PART NUMBER	QTY.	DESCRIPTION
1	2030-045	2	HOSE,4G1,4FFORX90S,4FFORX,32.5
2	2030-224	1	MANIFOLD,PILOT GENERATION
3	0201-311	3	ADAPTER,FS6400-04-04-0
4	8102-222	2	CAPSCREW,HH,3/8-16 UNCx1.0,GD8
5	2030-043	1	HOSE,12G6K,12FFORX90L,12FFORX,
6	2030-044	1	HOSE,12G6K,12FFORX90S,12FFORX,
7	2030-039	1	HOSE,8G1,8FFORX,8FFORX-45,41.0
8	0310-329	2	ADAPTER,6MFFOR-6MB
9	2030-038	1	HOSE,8G1,8FFORX,8FFORX-45,56.5
10	2030-091	1	TUBE,CHARGE,PRESSURE
11	2030-041	1	HOSE,12G6K,12FFORX90S,12FFORX
12	2030-042	1	HOSE,12G6K,12FFORX90L,12FFORX
13	0310-314	1	ADAPTER,10MFFOR-8MB
14	0200-172	1	COUPLING,SPLIT,CODE 61,0.75"
15	0201-658	1	ADAPTER,10MFFOR-8MB-S
16	0310-321	2	ADAPTER,12MFFOR-12MB90
17	0200-104	1	HUB,PUMP DRIVE,1 1/4" x 14 TOO
18	2045-998	1	PUMP,TANDEM,TRANSMISSION
19	0201-316	2	ADAPTER,FS6801-L-12-12-NW0
20	2030-072	1	MANIFOLD,DRAIN,CASE
21	2030-037	1	HOSE,12M4K,12FL90M,12FFORX,37.
22	2030-046	1	HOSE,6G1,6FFORX90S,6FFORX90L,2
23	0200-342	1	HOSE,RES,1.5”IDx10.5”
24	0300-687	4	CLAMP,HOSE,1.5,#24
25	0200-355	1	ADAPTER,SPLINE
26	0307-169	1	O-RING,AUXILIARY PUMP
27	0200-124	1	TUBE,INTAKE,RC 50
28	0200-171	1	COUPLING,SPLIT,CODE 61,1.25"
29	0200-119	1	PUMP,HYD,AUX
30	8051-272	2	WASHER,SPRING LOCK,3/8,ZN
31	2030-047	1	HOSE,6G1,6FFORX90S,6FFORX,41.5
32	0310-468	8	CAPSCREW,HH,M10x1.5x35,ZINC PL
33	0301-781	8	WASHER,SPLIT LOCK,10mm,ZN
34	0310-294	1	O-RING,#222,1.50x1.75x.13
35	0201-558	1	O-RING,0.984IDx0.139CS
36	0403-001	4	O-RING VALVE RELIEF
37	0403-002	4	O-RING BACK-UP VALVE RELIEF
38	0201-876	4	VALVE,RELIEF,5500 PSI
39	0403-100	1	RELIEF POSI POWER

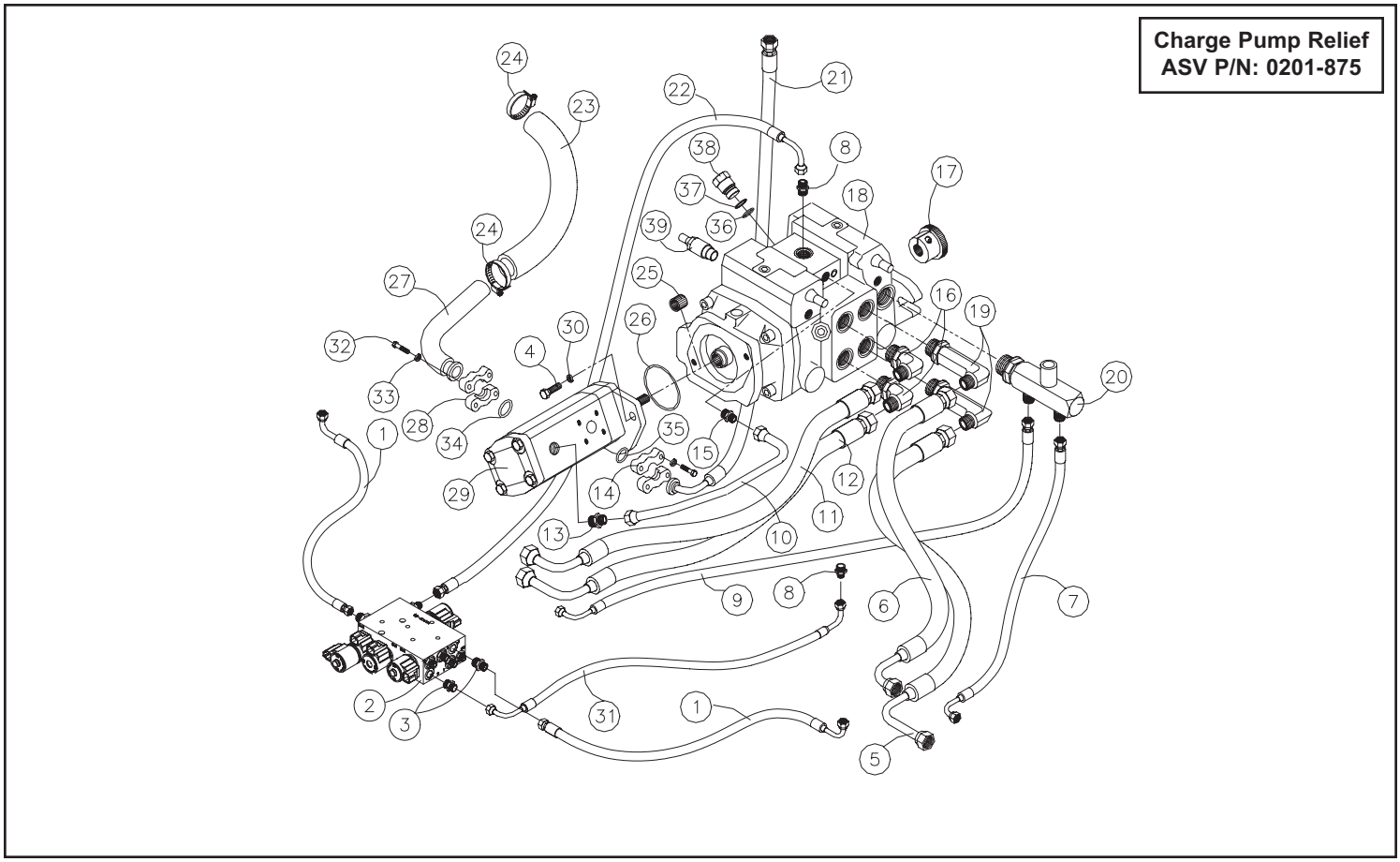

ENGINE ASSEMBLY (SN: RSC 01554-Current)

REF. NO.	PART NUMBER	QTY.	DESCRIPTION
1	8040-726	4	NUT,HEX,NYLOCK,5/8-11 UNC,ZN
2	0304-948	4	LIMITER,MNT,MOTOR
3	0300-458	4	MOUNT,ENGINE,REAR
4	0300-686	2	CLAMP,HOSE,2.0,#32
5	0200-156	1	ADAPTER,RUBBER,2.5X2.0
6	0200-157	1	ASSY,CLEANER,AIR
7	8102-591	4	CAPSCREW,HH,5/8-11x3,YZ
8	0200-165	1	WLMT,MNT,ENGINE,RH
9	0304-900	1	MNT,PLATE,PUMP
10	0304-507	1	PLATE,FLYWHEEL
11	0200-111	1	ENGINE,PERKINS,404C-22
12	0200-166	1	WLMT,MNT,ENGINE,LH
13	0200-562	1	STARTER (PERKINS #185086600)
14	0304-503	1	VALVE,DUST
15	0200-339	1	FILTER,AIR,PRIMARY
16	0200-340	1	FILTER,AIR,SECONDARY
17	0200-158	1	BAND,MNT,AIR CLEANER
18	0200-329	5	CAPSCREW,HH,M8x1.25x16MM
19	8051-242	17	WASHER,SPRING LOCK,5/16,ZN
20	0200-034	1	MNT,ENGINE,REAR,RH
21	8040-426	2	NUT,HEX,NYLOCK,5/16-18 UNC,ZN
22	8102-130	7	CAPSCREW,HH 5/16-18x3/4,GR8
23	8050-247	2	WASHER,WROUGHT,5/16,SAE,ZN
24	0300-211	4	CAPSCREW,M8 x 1.25 x 25MM LG
25	0304-511	1	GASKET,MUFFLER
26	0200-334	1	TAILPIPE, OUTLET
27	0300-263	1	CLAMP,MUFFLER,2"
28	0200-122	1	MUFFLER,50 SERIES
29	2045-793	1	BELT,FAN
30	8040-246	2	NUT,HEX,NYLOCK,10-24 UNC,ZN
31	0304-078	1	LEVER,THROTTLE
32	8105-429	2	CAPSCREW,SOC HD,10-24X5/8,BLZN
33	8051-431	8	WASHER,SPRING LOCK,5/8,ZN
34	0200-246	1	STRAP,HOLD-DOWN,BATTERY
35	0200-338	1	ASSY,FILTER,WATER
36	0200-160	1	BATTERY,50 SERIES
37	0304-335	2	BOLT,BATTERY,SIDEMOUNT
38	0200-219	1	WLMT,MNT,ENGINE,LH,REAR
39	0300-718	2	W/PIN,CLEVIS (THROTTLE CABLE)
40	0300-581	1	W/NUTS,U-BOLT,1/4-20

REF. NO.	PART NUMBER	QTY.	DESCRIPTION
41	0304-835	1	BULB,PRIMER
42	0300-455	1	CABLE,THROTTLE
43	0200-234	1	CABLE,BATTERY,NEGATIVE
44	0200-199	1	CABLE,BATTERY,POSITIVE
45	0304-131	8	CAPSCREW,HH, M14-1.5 X30MM,GD8
46	0200-178	1	WLMT,BRKT,MNT,FILTER
47	0200-377	1	FILTER,OIL,ENGINE (PERKINS #140517050)
48	0300-732	4	CLAMP,HOSE,#4
49	0304-509	1	HOSE,FUEL,5/16x26"
50	0304-510	1	HOSE,FUEL,5/16x34"
51	0200-215	1	ASSY,FILTER,FUEL,PERKINS,404C22
52	0200-213	1	FILTER,FUEL,PERKINS,404C22
53	8102-220	2	CAPSCREW,HH,3/8-16x0.75",GD8
54	0310-501	1	GUARD,BATTERY
55	8040-486	2	NUT,HEX,NYLOCK,3/8-16 UNC,ZN
56	8102-132	8	CAPSCREW,HH,5/16-18UNCx1.0 GD8
57	0300-546	1	CABLE,GROUND,ENGINE
58	0200-159	1	BRKT,MNT,AIR CLEANER
59	8051-272	21	WASHER,SPRING LOCK,3/8,ZN
60	8102-222	20	CAPSCREW,HH,3/8-16 UNCx1.0,GD8
61	8102-138	1	CAPSCREW,HH,5/16-18 X 2.25 GD8
62	0304-351	1	CHANNEL,TREAD,LOADER RC-30
63	0200-335	6	SPRING,TAILPIPE
64	0200-333	1	TAILPIPE,CENTER
65	0200-332	1	TAILPIPE,W/MTG FLANGE
66	0200-312	1	ASSY,TAILPIPE
67	0304-549	1	HEATER,BLOCK
68	0200-313	1	INDICATOR,AIRCLEANER
69	0200-617	1	SCREEN,FILTER,WATER
70	0200-560	1	CAP,AIR CLEANER
71	2030-279	1	GUARD,RAIN, STARTER

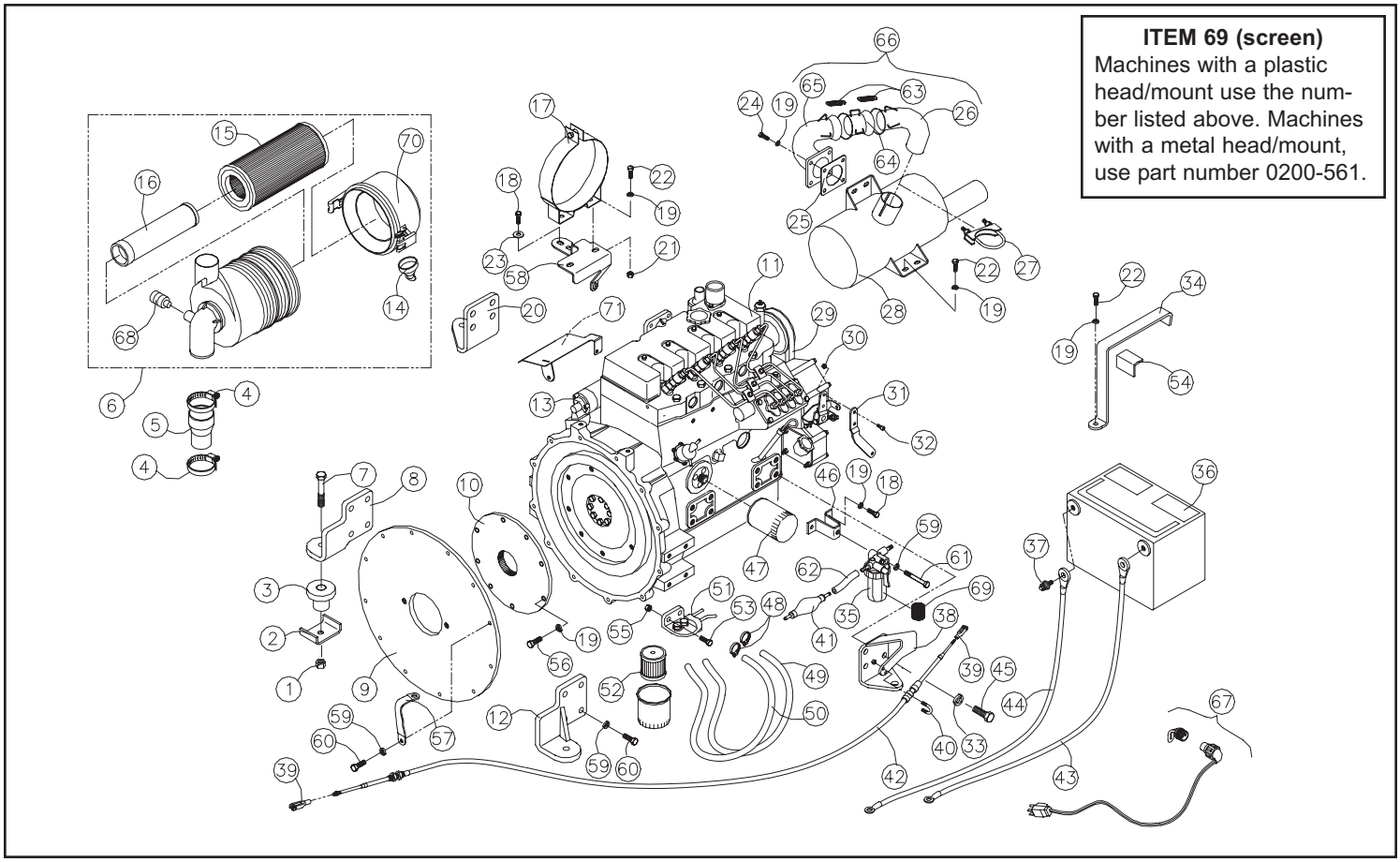

FUSE PANEL ASSEMBLY (SN: RSC 00101-2285)

REF. NO.	PART NUMBER	QTY.	DESCRIPTION
1	0200-558	1	HARNESS,WIRING,MAIN,RC50 (SERIAL #: 1554-2285)
2	0310-807	2	RELAY,MINI, 35 AMP
3	0310-805	1	FUSE,MAXI, 80 AMP
4	0304-519	2	RELAY,PLUG,GLOW
5	0310-800	1	FUSE,MAXI,20 AMP
6	0310-803	2	FUSE,MAXI, 50 AMP
7	0310-802	2	FUSE,MAXI, 40 AMP
8	0310-794	3	FUSE,MINI, 5 AMP
9	0310-795	9	FUSE,MINI,10 AMP
10	0310-793	2	FUSE,MINI,2 AMP
11	0310-806	11	RELAY,MICRO, 20 AMP
12	0310-811	1	DIODE, 3 AMP
13	0200-559	1	COVER,PANEL,FUSE,W/DECALS,RC50
14	0200-510	1	RESISTOR,33OHM/3WATT,OHMITE43F

REF. NO.	PART NUMBER	QTY.	DESCRIPTION

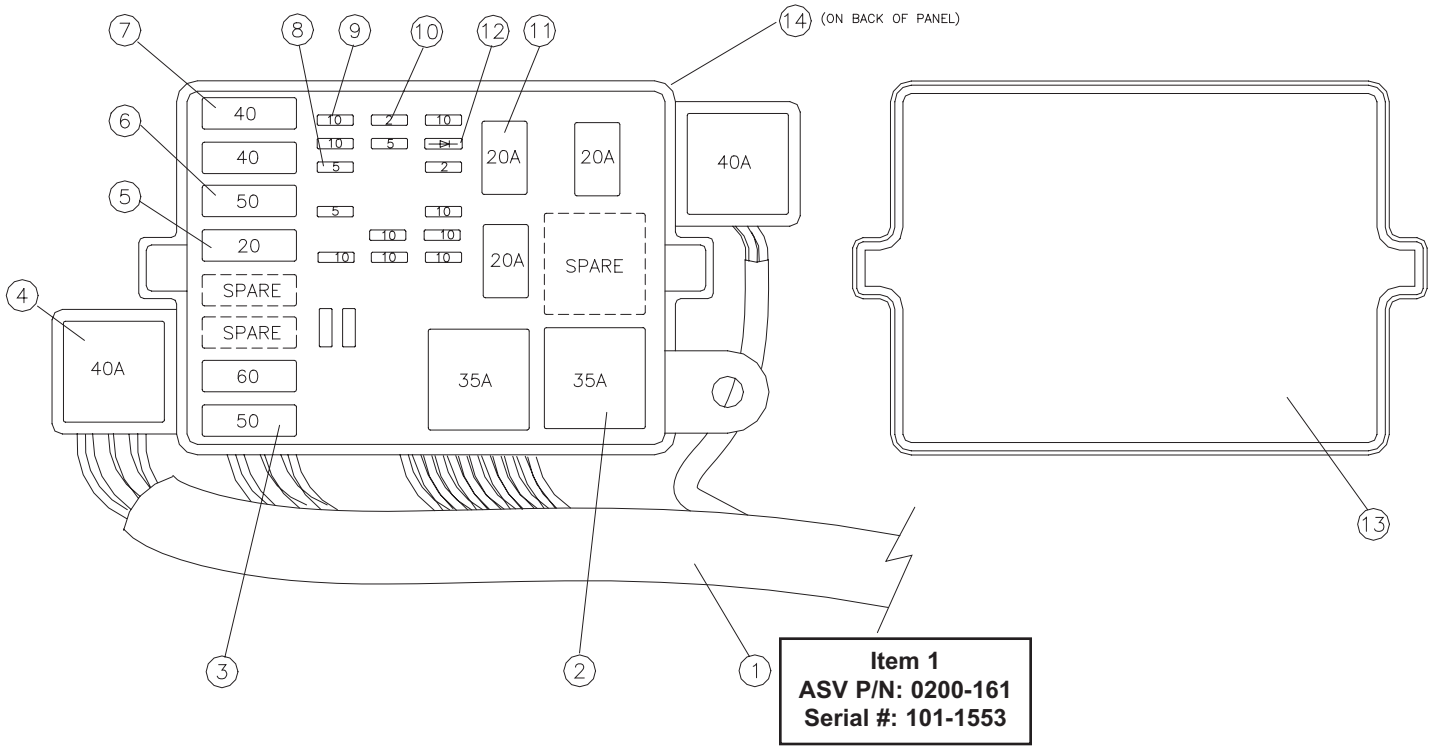

Item 1
ASV P/N: 0200-161
Serial #: 101-1553

FUSE PANEL ASSEMBLY (SN: RSC 02286-Current)

REF. NO.	PART NUMBER	QTY.	DESCRIPTION
1	2030-226	1	HARNESS,W/FUSE PANEL
2	0310-807	2	RELAY,MINI, 35 AMP
3	0310-805	1	FUSE,MAXI, 80 AMP
4	0304-519	2	RELAY,PLUG,GLOW
5	0310-800	1	FUSE,MAXI,20 AMP
6	0310-803	2	FUSE,MAXI, 50 AMP
7	0310-802	2	FUSE,MAXI, 40 AMP
8	0310-794	3	FUSE,MINI, 5 AMP
9	0310-795	9	FUSE,MINI,10 AMP
10	0310-793	2	FUSE,MINI,2 AMP
11	0310-806	11	RELAY,MICRO, 20 AMP
12	0310-811	1	DIODE, 3 AMP
13	0310-796	1	FUSE,MINI,15 AMP
14	0310-801	1	FUSE,MAXI, 30 AMP
15	0310-798	2	FUSE,MINI,25 AMP
16	2030-196	1	COVER,PANEL,FUSE,W/DECALS,RC60
17	0200-510	1	RESISTOR,33OHM/3WATT,OHMITE43F

REF. NO.	PART NUMBER	QTY.	DESCRIPTION

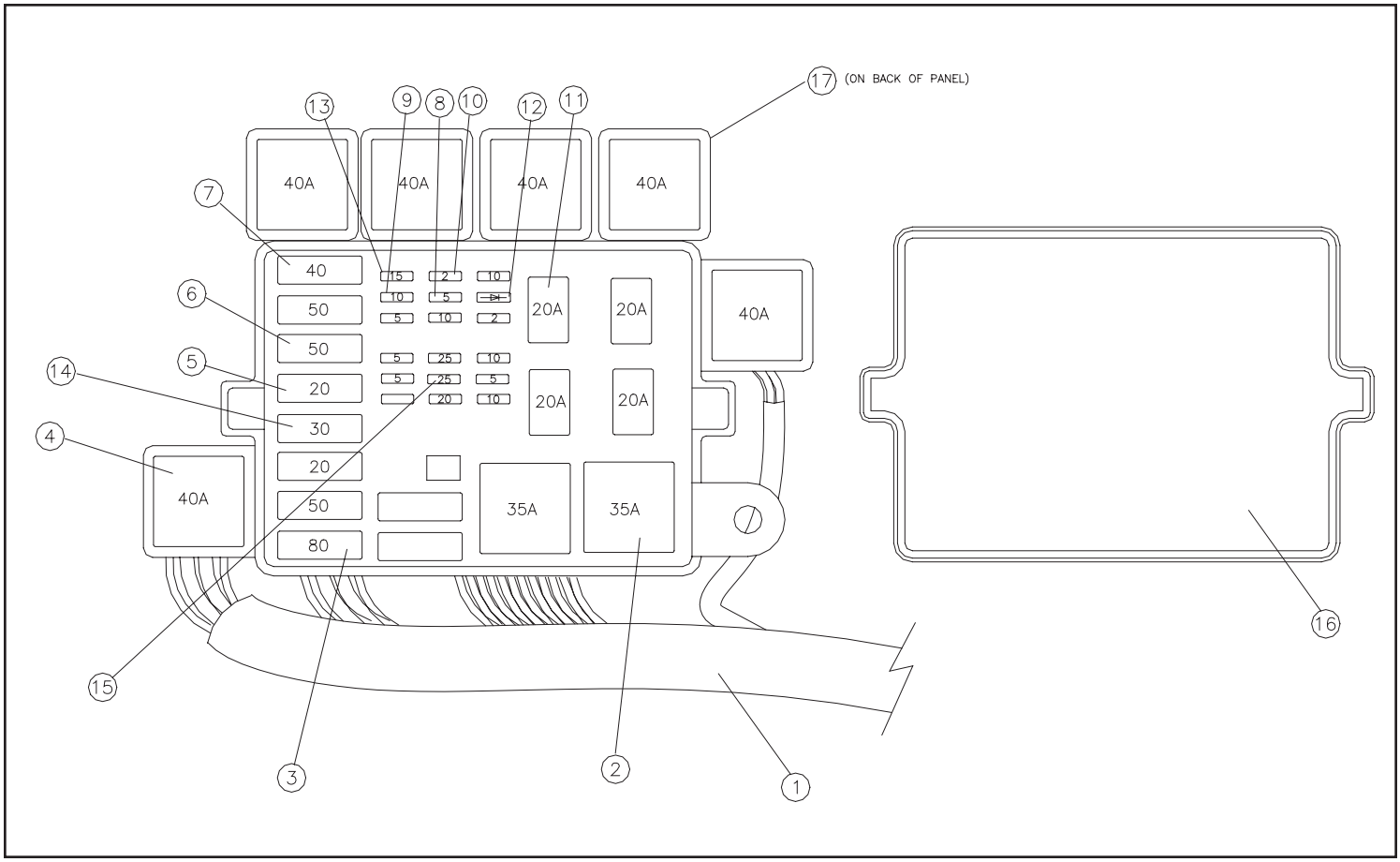

TORSION AXLE ASSEMBLY (SN: RSC 00101-Current)

REF. NO.	PART NUMBER	QTY.	DESCRIPTION
1	0702-006	2	TRACK,15 x 165.9
2	0200-162	1	AXLE,TORSION,5000LB,-10^,30.84
3	0200-163	1	AXLE,TORSION,5000LB,-45^,30.84
4	8102-586	16	CAPSCREW,HH,5/8-11X1.75ZN,GD8
5	8040-726	16	NUT,HEX,NYLOCK,5/8-11 UNC,ZN
6	8050-408	32	WASHER,5/8 x .120,ZN
7	8051-431	16	WASHER,SPRING LOCK,5/8,ZN
8	0200-341	4	CAPSCREW,HH,3/4-16x2.25,GD8
9	8051-440	4	WASHER,SPRING LOCK,3/4,ZN
10	0200-287	4	WASHER,1/2"THICK

REF. NO.	PART NUMBER	QTY.	DESCRIPTION

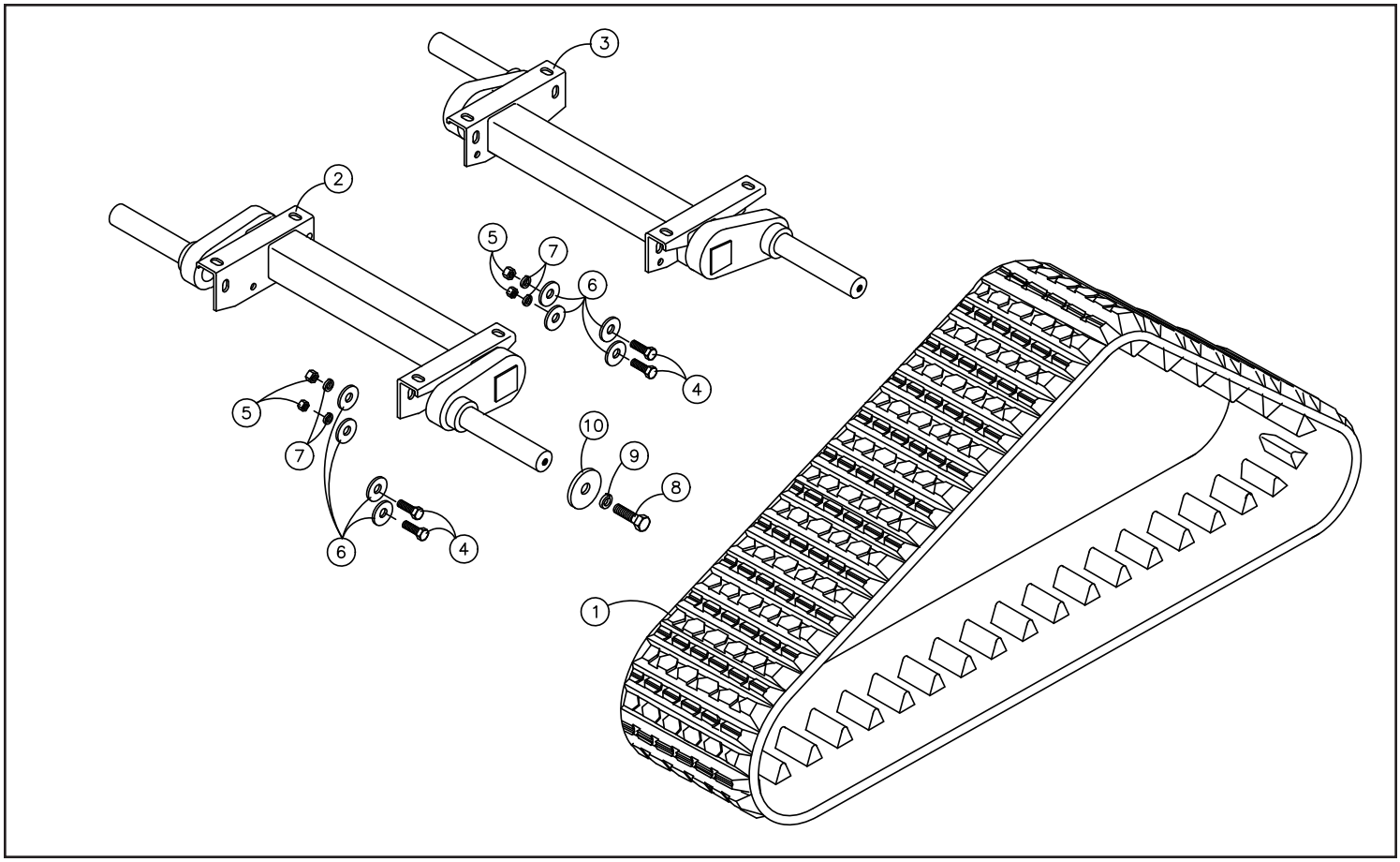

UNDERCARRIAGE ASSEMBLY RT (SN: RSC 00101-698)

REF. NO.	PART NUMBER	QTY.	DESCRIPTION
1	0702-049	1	WLMT,SPROCKET,MACH
2	0303-217	1	SEAL,AP5,50x90x11.4
3	0307-039	1	BEARING (62092RS)
4	0700-147	1	ASSY,HOUSING,BEARING
5	0314-304	1	WLMT,GUARD,SEAL
6	8051-332	7	WASHER,SPRING LOCK,1/2,ZN
7	0702-024	1	WLMT,PLATE,BEARING
8	8102-407	4	CAPSCREW,HH,1/2-13UNCx2.0,GD8,
9	0700-144	1	RING,SNAP,INT,85mm
10	0700-145	1	RING,SNAP,EXT,45mm
11	0307-074	1	PLUG,HOUSING,BEARING
12	0700-124	12	NUT,TOPLOCK,1/2-13UNC,ZN,GD8
13	0702-008	1	MOTOR,HYD
14	0200-282	10	NUT,FLANGE,M14x1.5
15	8040-726	8	NUT,HEX,NYLOCK,5/8-11 UNC,ZN
16	0200-003	12	TUBE,COVER
17	0200-004	12	TUBE,INNER
18	8043-806	1	NUT,HEX,1-8 UNC,STEEL LOCK,ZN
19	8102-890	1	CAPSCREW,HH,1.0 x 8UNC x 10.0,
20	8102-405	3	CAPSCREW,HH,1/2-13 UNCx1.5,GD8
21	8040-606	3	NUT,HEX,NYLOCK,1/2-13 UNC,ZN
22	0310-328	1	ADAPTER,6MFFOR-6MB-90
23	8102-685	1	CAPSCREW,HH 3/4-10UNCx 4.5 GD8
24	0702-048	1	RING,SPROCKET,ALPHA
25	8102-419	12	CAPSCREW,HH 1/2-13UNCx 7.0,GD8
26	0702-044	1	WLMT,TABLE,2
27	8102-588	8	CAPSCREW,HH,5/8-11UNCx2.25,GD8
28	0702-064	1	ASSY,TENSIONER
29	0702-077	4	BUSHING,DU,1.75 x 2.0
30	0702-060	2	SPACER,AXLE
31	0702-115	8	RING,SNAP,INT,PLATED
32	0702-098	4	ASSY,SEAL
33	0702-106	8	BEARING,CONE
34	0702-105	8	BEARING,CUP
35	0702-080	2	WLMT,HUB,WHEEL,14"
36	0702-111	4	CAP,WHEEL
37	8011-227	32	BOLT,CARRIAGE,3/8-16 UNC x 2.0
38	0702-079	2	WLMT,HUB,WHEEL,10"
39	0300-985	32	SPEED NUT,3/8
40	0702-155	12	WASHER,BEARING
41	0304-722	14	NUT,HEX,JAM,LOCKING,3/4-10UNC,
42	0307-011	2	WHEEL,END,14"
43	0702-091	2	PLATE,WHEEL,14"
44	8051-272	32	WASHER,SPRING LOCK,3/8,ZN
45	8040-486	32	NUT,HEX,NYLOCK,3/8-16 UNC,ZN
46	8102-683	1	CAPSCREW,HH,3/4-10UNCx3.5 GD 8
47	0304-118	8	SNAP,RING
48	0304-117	8	GUARD,BEARING
49	0702-075	16	BEARING,CONE
50	0303-141	10	SEAL,APY,1.250x2.062x.450
51	0702-076	16	BEARING,CUP
52	0702-057	8	WHEEL,10"
53	0702-132	8	CAP,WHEEL
54	0702-141	8	RING,RETAINING,INTERNAL
55	0702-263	1	WLMT,RAIL,ALPHA,HEAVY
56	8051-431	8	WASHER,SPRING LOCK,5/8,ZN
57	0310-313	2	ADAPTER,12MFFOR-12MB
58	0310-345	1	ADAPTER,8MFFOR--8MB
59	0702-090	2	PLATE,WHEEL,10"
60	0307-010	2	WHEEL,UHMW,CENTER,10"
61	0702-145	2	AXLE,MACHINED,10.32
62	0300-946	2	FITTING,GREASE,1/8 NPT
63	0702-241	4	AXLE,ONE PIECE,CENTER
64	0702-117	1	WLMT,ROD,LH
65	0304-957	1	TENSIONER,TRACK
66	0304-077	1	NUT,HEX,JAM,1 1/4 - 7,RH
67	0702-118	1	WLMT,ROD,RH
68	0703-102	1	VALVE,BLEEDER,5/16-UNF
69	0200-505	1	ASSY,CYLINDER,TENSION,W/ZERK
70	0702-052	1	ASSY,SPROCKET
71	0702-114	1	RING,RETAINER,INT
72	0702-112	1	RETAINER,SEAL
73	0303-141	1	SEAL,APY,1.250x2.062x.450
74	0702-113	1	O-RING,2-037,2-625 ODx2.5 IDx.
75	----------	1	SUB-ASSY,HOUSING,BEARING (SEE NOTE)
76	0302-435	2	FITTING,GREASE,1/8 NPT,90D
77	0210-001	10	STUD,WHEEL,M14x1.5
78	0702-251	1	ZERK,GREASE,1/8NPT,HIGH PRESSURE

Item 75 is no longer avalible. If replacement is required, order (0702-305). For additional information see instruction P100-194.

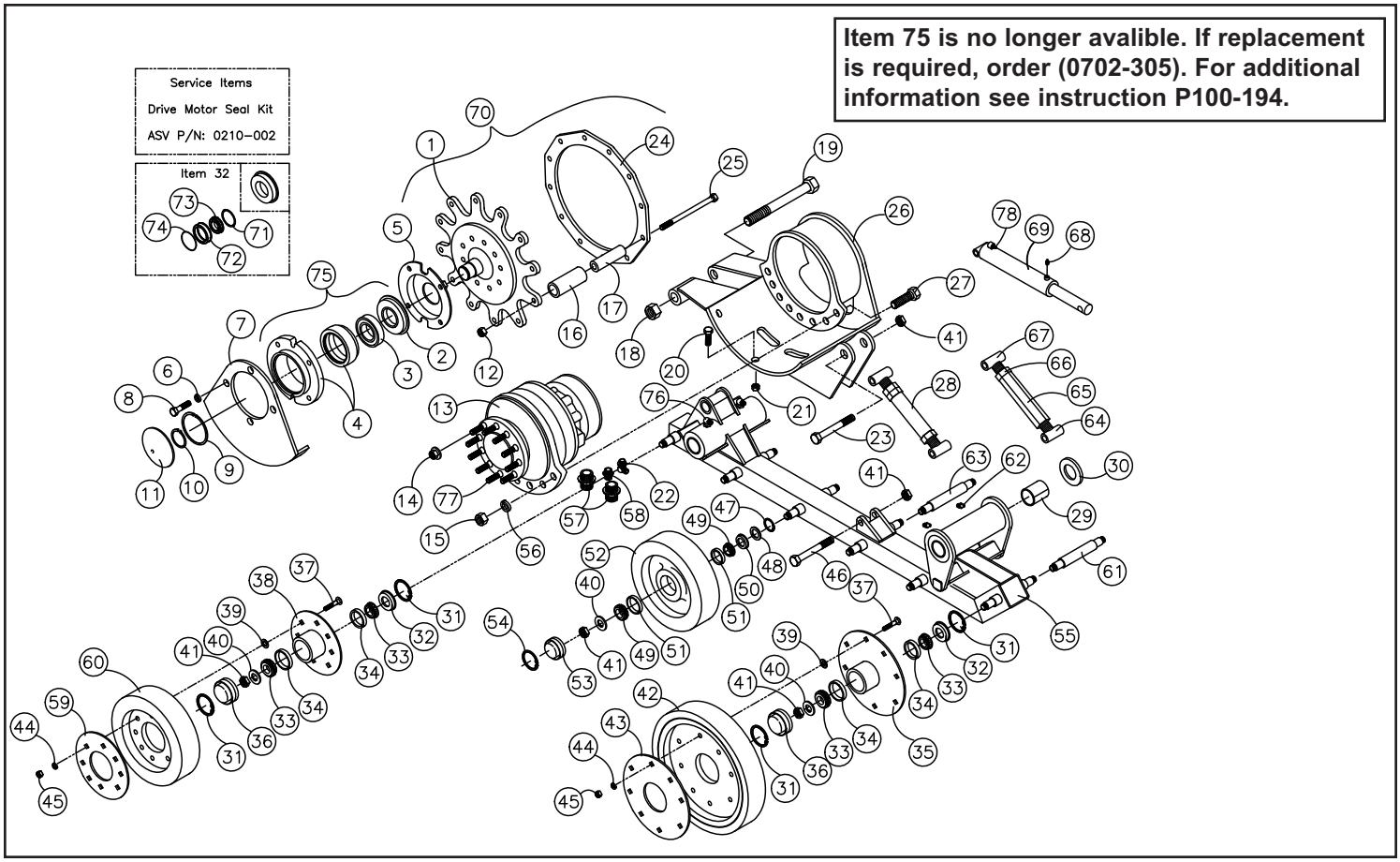

UNDERCARRIAGE ASSEMBLY RT (SN: RSC 00699-Current)

REF. NO.	PART NUMBER	QTY.	DESCRIPTION
1	0702-230	1	SPROCKET,CAST,MACHINED (SERIAL # 699-CURRENT)
2	0303-217	1	SEAL,AP5,50x90x11.4
3	0307-039	1	BEARING (62092RS)
4	0700-147	1	ASSY,HOUSING,BEARING
5	0314-304	1	WLMT,GUARD,SEAL
6	8051-332	7	WASHER,SPRING LOCK,1/2,ZN
7	0702-024	1	WLMT,PLATE,BEARING
8	8102-406	7	CAPSCREW,HH,1/2-13UNCx1.75,GD8
9	0700-144	1	RING,SNAP,INT,85mm
10	0700-145	1	RING,SNAP,EXT,45mm
11	0307-074	1	PLUG,HOUSING,BEARING
12	0700-124	12	NUT,TOPLOCK,1/2-13UNC,ZN,GD8
13	0702-335	1	MOTOR,HYD (SERIAL # 699-CURRENT)
14	0200-282	12	NUT,FLANGE,M14x1.5
15	8040-726	8	NUT,HEX,NYLOCK,5/8-11 UNC,ZN
16	0200-003	12	TUBE,COVER
17	0200-004	12	TUBE,INNER
18	8043-806	1	NUT,HEX,1-8 UNC,STEEL LOCK,ZN
19	8102-890	1	CAPSCREW,HH,1.0 x 8UNC x 10.0,
20	8051-431	8	WASHER,SPRING LOCK,5/8,ZN
21	8040-606	3	NUT,HEX,NYLOCK,1/2-13 UNC,ZN
22	0201-309	1	ADAPTER,FS6400-04-06-0
23	8102-685	1	CAPSCREW,HH 3/4-10UNCx 4.5 GD8
24	0702-048	1	RING,SPROCKET,ALPHA
25	8102-423	12	CAPSCREW,HH,1/2-13UNCx7.25,GD8
26	0702-227	1	TABLE,MACHINED,RH
27	8102-588	8	CAPSCREW,HH,5/8-11UNCx2.25,GD8
28	0702-064	1	ASSY,TENSIONER
29	0702-077	4	BUSHING,DU,1.75 x 2.0
30	0702-113	4	O-RING,2-037,2-625 ODx2.5 IDx.
31	0702-115	8	RING,SNAP,INT,PLATED
32	0702-098	4	ASSY,SEAL
33	0702-106	8	BEARING,CONE
34	0702-105	8	BEARING,CUP
35	0702-202	2	WHEEL,14",W/HUB
36	0702-111	4	CAP,WHEEL
37	0702-060	2	SPACER,AXLE
38	0702-254	2	ASSY,WHEEL,14",SERVICE
39	0702-253	8	ASSY,MIDWHEEL,10",SERVICE
40	0702-155	12	WASHER,BEARING
41	0304-722	14	NUT,HEX,JAM,LOCKING,3/4-10UNC,
42	0702-200	2	WHEEL,10",W/HUB
43	0702-252	2	ASSY,END WHEEL,10",SERVICE
44	0300-290	2	ADAPTER,O-RING TO FLARE 12MJ-12MB
45	0310-345	1	ADAPTER,8MFFOR--8MB
46	8102-683	1	CAPSCREW,HH,3/4-10UNCx3.5 GD 8
47	0304-118	8	SNAP,RING
48	0304-117	8	GUARD,BEARING
49	0702-075	16	BEARING,CONE
50	0303-141	8	SEAL,APY,1.250x2.062x.450
51	0702-076	16	BEARING,CUP
52	0702-057	8	WHEEL,10"
53	0702-132	8	CAP,WHEEL
54	0702-141	8	RING,RETAINING,INTERNAL
55	0702-263	1	WLMT,RAIL,ALPHA,HEAVY
56	0200-505	1	ASSY,CYLINDER,TENSION,W/ZERK
57	0703-102	1	VALVE,BLEEDER,5/16-UNF
58	----------	1	SUB-ASSY,HOUSING,BEARING (SEE NOTE)
59	0210-001	12	STUD,WHEEL,M14x1.5
60	0200-331	8	WASHER,4.05x2.1875x0.188
61	0702-210	4	WASHER,4.41x2.00x.104
62	0302-435	2	FITTING,GREASE,1/8 NPT,90D
63	0702-241	4	AXLE,ONE PIECE,CENTER
64	0702-145	2	AXLE,ONE PIECE,END
65	0702-117	1	WLMT,ROD,LH
66	0304-957	1	TENSIONER,TRACK
67	0304-077	1	NUT,HEX,JAM,1 1/4 - 7,RH
68	0702-118	1	WLMT,ROD,RH
69	0300-946	2	FITTING,GREASE,1/8 NPT
70	0702-196	1	ASSY,SPROCKET (SERIAL #699-CURRENT)
71	0702-114	1	RING,RETAINER,INT
72	0303-141	1	SEAL,APY,1.250x2.062x.450
73	0702-112	1	RETAINER,SEAL
74	0702-113	1	O-RING,2-037,2-625 ODx2.5 IDx.
75	0702-251	1	ZERK,GREASE,1/8NPT,HIGH PRESSURE.

Item 58 is no longer avalible. If replacement is required, order (0702-305). For additional information see instruction P100-194.

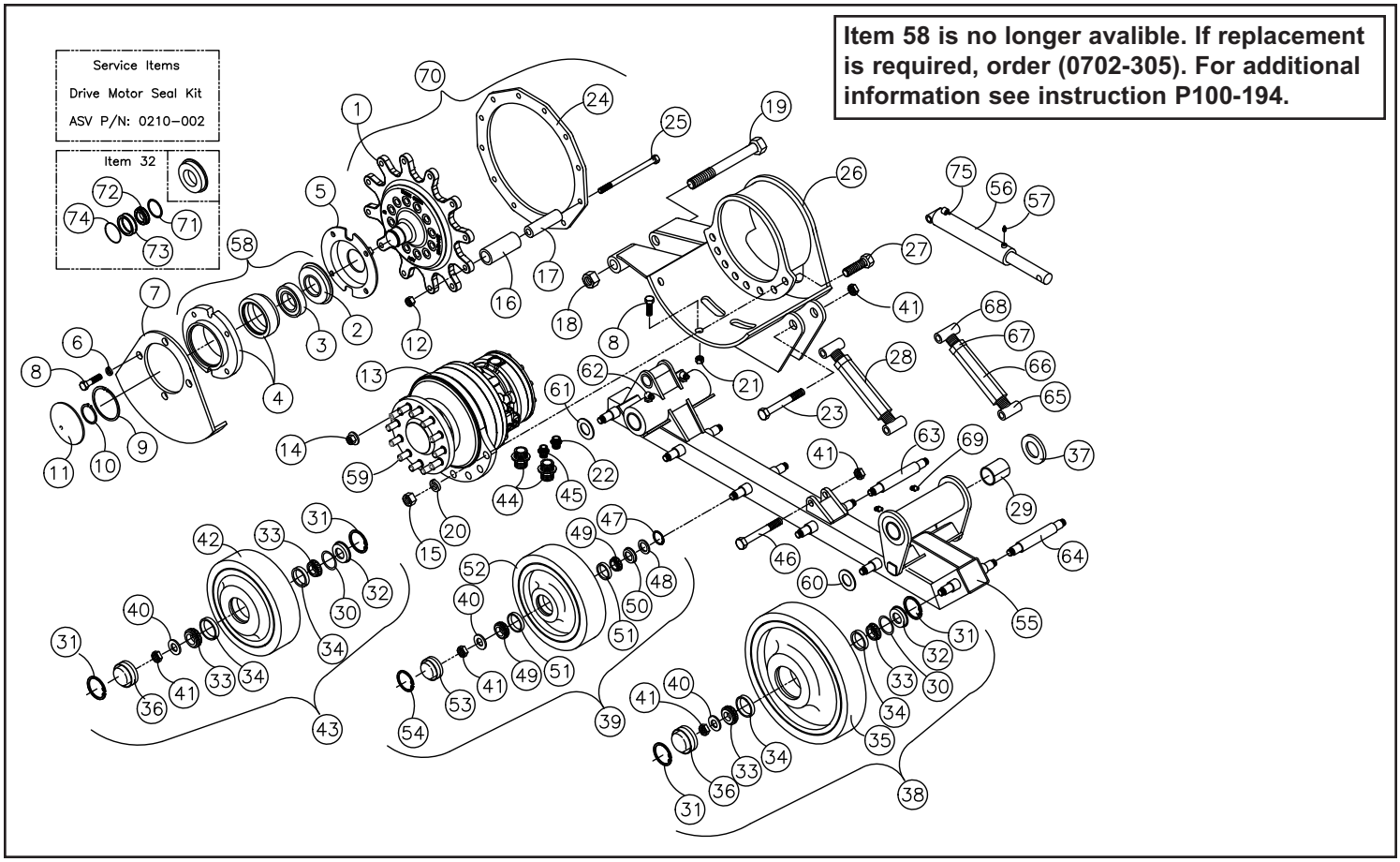

UNDERCARRIAGE ASSEMBLY LT (SN: RSC 00101-698)

REF. NO.	PART NUMBER	QTY.	DESCRIPTION
1	0702-049	1	WLMT,SPROCKET,MACH
2	0303-217	1	SEAL,AP5,50x90x11.4
3	0307-039	1	BEARING (62092RS)
4	0700-147	1	ASSY,HOUSING,BEARING
5	0314-304	1	WLMT,GUARD,SEAL
6	8051-332	7	WASHER,SPRING LOCK,1/2,ZN
7	0702-024	1	WLMT,PLATE,BEARING
8	8102-407	4	CAPSCREW,HH,1/2-13UNCx2.0,GD8,
9	0700-144	1	RING,SNAP,INT,85mm
10	0700-145	1	RING,SNAP,EXT,45mm
11	0307-074	1	PLUG,HOUSING,BEARING
12	0700-124	12	NUT,TOPLOCK,1/2-13UNC,ZN,GD8
13	0702-008	1	MOTOR,HYD
14	0200-282	10	NUT,FLANGE,M14x1.5
15	8040-726	8	NUT,HEX,NYLOCK,5/8-11 UNC,ZN
16	0200-003	12	TUBE,COVER
17	0200-004	12	TUBE,INNER
18	8043-806	1	NUT,HEX,1-8 UNC,STEEL LOCK,ZN
19	8102-890	1	CAPSCREW,HH,1.0 x 8UNC x 10.0,
20	8102-405	3	CAPSCREW,HH,1/2-13 UNCx1.5,GD8
21	8040-606	3	NUT,HEX,NYLOCK,1/2-13 UNC,ZN
22	0310-328	1	ADAPTER,6MFFOR-6MB-90
23	8102-685	1	CAPSCREW,HH 3/4-10UNCx 4.5 GD8
24	0702-048	1	RING,SPROCKET,ALPHA
25	8102-419	12	CAPSCREW,HH 1/2-13UNCx 7.0,GD8
26	0702-042	1	WLMT,TABLE,1
27	8102-588	8	CAPSCREW,HH,5/8-11UNCx2.25,GD8
28	0702-064	1	ASSY,TENSIONER
29	0702-077	4	BUSHING,DU,1.75 x 2.0
30	0702-060	2	SPACER,AXLE
31	0702-115	8	RING,SNAP,INT,PLATED
32	0702-098	4	ASSY,SEAL
33	0702-106	8	BEARING,CONE
34	0702-105	8	BEARING,CUP
35	0702-080	2	WLMT,HUB,WHEEL,14"
36	0702-111	4	CAP,WHEEL
37	8011-227	32	BOLT,CARRIAGE,3/8-16 UNC x 2.0
38	0702-079	2	WLMT,HUB,WHEEL,10"
39	0300-985	32	SPEED NUT,3/8
40	0702-155	12	WASHER,BEARING
41	0304-722	14	NUT,HEX,JAM,LOCKING,3/4-10UNC,
42	0307-011	2	WHEEL,END,14"
43	0702-091	2	PLATE,WHEEL,14"
44	8051-272	32	WASHER,SPRING LOCK,3/8,ZN
45	8040-486	32	NUT,HEX,NYLOCK,3/8-16 UNC,ZN
46	8102-683	1	CAPSCREW,HH,3/4-10UNCx3.5 GD 8
47	0304-118	8	SNAP,RING
48	0304-117	8	GUARD,BEARING
49	0702-075	16	BEARING,CONE
50	0303-141	10	SEAL,APY,1.250x2.062x.450
51	0702-076	16	BEARING,CUP
52	0702-057	8	WHEEL,10"
53	0702-132	8	CAP,WHEEL
54	0702-141	8	RING,RETAINING,INTERNAL
55	0702-263	1	WLMT,RAIL,ALPHA,HEAVY
56	8051-431	8	WASHER,SPRING LOCK,5/8,ZN
57	0310-313	2	ADAPTER,12MFFOR-12MB
58	0310-345	1	ADAPTER,8MFFOR--8MB
59	0702-090	2	PLATE,WHEEL,10"
60	0307-010	2	WHEEL,UHMW,CENTER,10"
61	0702-145	2	AXLE,MACHINED,10.32
62	0300-946	2	FITTING,GREASE,1/8 NPT
63	0702-241	4	AXLE,ONE PIECE,CENTER
64	0702-117	1	WLMT,ROD,LH
65	0304-957	1	TENSIONER,TRACK
66	0304-077	1	NUT,HEX,JAM,1 1/4 - 7,RH
67	0702-118	1	WLMT,ROD,RH
68	0703-102	1	VALVE,BLEEDER,5/16-UNFE
69	0200-505	1	ASSY,CYLINDER,TENSION,W/ZERK
70	0702-052	1	ASSY,SPROCKET
71	0702-114	1	RING,RETAINER,INT
72	0702-112	1	RETAINER,SEAL
73	0303-141	1	SEAL,APY,1.250x2.062x.450
74	0702-113	1	O-RING,2-037,2-625 ODx2.5 IDx.
75	----------	1	SUB-ASSY,HOUSING,BEARING (SEE NOTE)
76	0302-435	2	FITTING,GREASE,1/8 NPT,90D
77	0210-001	10	STUD,WHEEL,M14x1.5
78	0702-251	1	ZERK,GREASE,1/8NPT,HIGH PRESSURE

Item 75 is no longer avalible. If replacement is required, order (0702-305). For additional information see instruction P100-194.

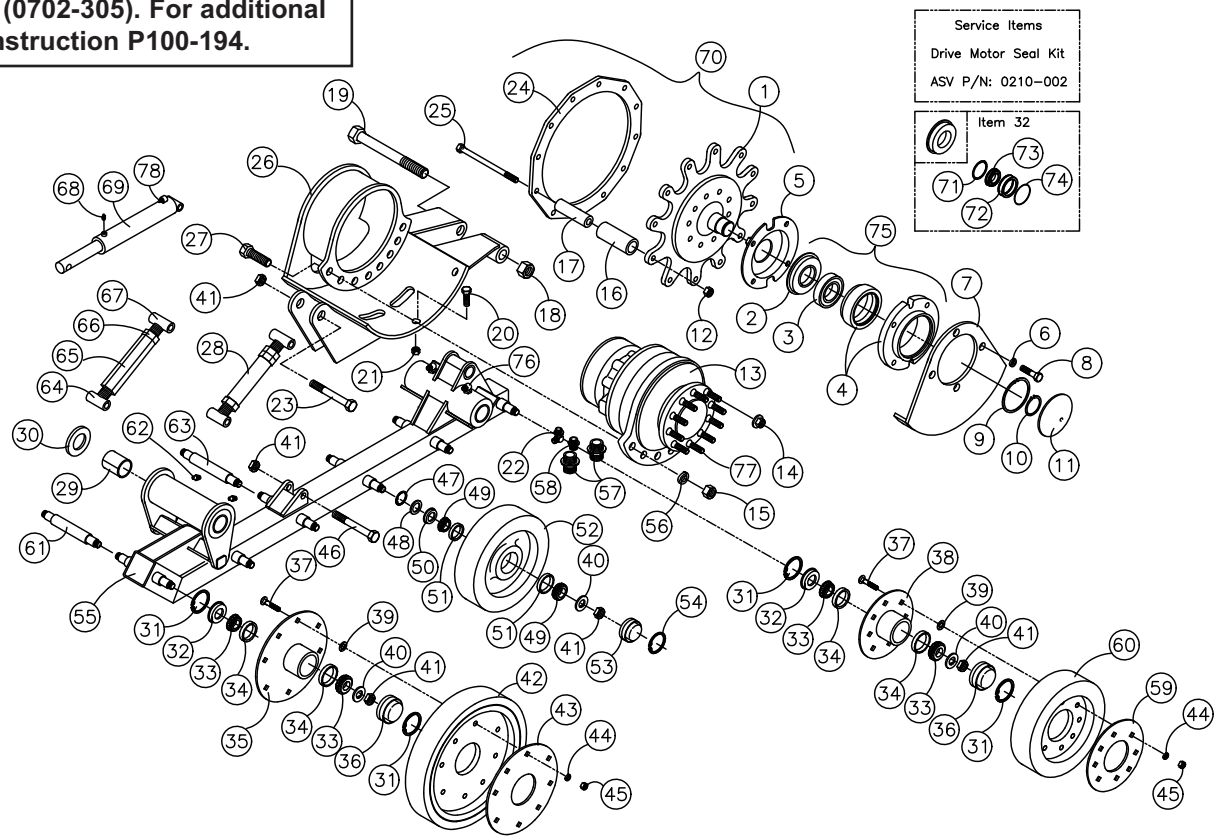

UNDERCARRIAGE ASSEMBLY LT (SN: RSC 00699-Current)

REF. NO.	PART NUMBER	QTY.	DESCRIPTION
1	0702-230	1	SPROCKET,CAST,MACHINED (SERIAL #699-CURRENT)
2	0303-217	1	SEAL,AP5,50x90x11.4
3	0307-039	1	BEARING (62092RS)
4	0700-147	1	ASSY,HOUSING,BEARING
5	0314-304	1	WLMT,GUARD,SEAL
6	8051-332	7	WASHER,SPRING LOCK,1/2,ZN
7	0702-024	1	WLMT,PLATE,BEARING
8	8102-406	7	CAPSCREW,HH,1/2-13UNCx1.75,GD8
9	0700-144	1	RING,SNAP,INT,85mm
10	0700-145	1	RING,SNAP,EXT,45mm
11	0307-074	1	PLUG,HOUSING,BEARING
12	0700-124	12	NUT,TOPLOCK,1/2-13UNC,ZN,GD8
13	0702-335	1	MOTOR,HYD (SERIAL #699-CURRENT)
14	0200-282	12	NUT,FLANGE,M14x1.5
15	8040-726	8	NUT,HEX,NYLOCK,5/8-11 UNC,ZN
16	0200-003	12	TUBE,COVER
17	0200-004	12	TUBE,INNER
18	8043-806	1	NUT,HEX,1-8 UNC,STEEL LOCK,ZN
19	8102-890	1	CAPSCREW,HH,1.0 x 8UNC x 10.0,
20	8051-431	8	WASHER,SPRING LOCK,5/8,ZN
21	8040-606	3	NUT,HEX,NYLOCK,1/2-13 UNC,ZN
22	0201-309	1	ADAPTER,FS6400-04-06-0
23	8102-685	1	CAPSCREW,HH 3/4-10UNCx 4.5 GD8
24	0702-048	1	RING,SPROCKET,ALPHA
25	8102-423	12	CAPSCREW,HH,1/2-13UNCx7.25,GD8
26	0702-228	1	TABLE,MACHINED,LH
27	8102-588	8	CAPSCREW,HH,5/8-11UNCx2.25,GD8
28	0702-064	1	ASSY,TENSIONER
29	0702-077	4	BUSHING,DU,1.75 x 2.0
30	0702-113	4	O-RING,2-037,2-625 ODx2.5 IDx.
31	0702-115	8	RING,SNAP,INT,PLATED
32	0702-098	4	ASSY,SEAL
33	0702-106	8	BEARING,CONE
34	0702-105	8	BEARING,CUP
35	0702-202	2	WHEEL,14",W/HUB
36	0702-111	4	CAP,WHEEL
37	0702-060	2	SPACER,AXLE
38	0702-254	2	ASSY,WHEEL,14",SERVICE
39	0702-253	8	ASSY,MIDWHEEL,10",SERVICE
40	0702-155	12	WASHER,BEARING

REF. NO.	PART NUMBER	QTY.	DESCRIPTION
41	0304-722	14	NUT,HEX,JAM,LOCKING,3/4-10UNC,
42	0702-200	2	WHEEL,10",W/HUB
43	0702-252	2	ASSY,END WHEEL,10",SERVICE
44	0300-290	2	ADAPTER,O-RING TO FLARE 12MJ-12MB
45	0310-345	1	ADAPTER,8MFFOR--8MB
46	8102-683	1	CAPSCREW,HH,3/4-10UNCx3.5 GD 8
47	0304-118	8	SNAP,RING
48	0304-117	8	GUARD,BEARING
49	0702-075	16	BEARING,CONE
50	0303-141	8	SEAL,APY,1.250x2.062x.450
51	0702-076	16	BEARING,CUP
52	0702-057	8	WHEEL,10"
53	0702-132	8	CAP,WHEEL
54	0702-141	8	RING,RETAINING,INTERNAL
55	0702-263	1	WLMT,RAIL,ALPHA,HEAVY
56	0200-505	1	ASSY,CYLINDER,TENSION,W/ZERK
57	0703-102	1	VALVE,BLEEDER,5/16-UNF
58	----------	1	SUB-ASSY,HOUSING,BEARING (SEE NOTE)
59	0210-001	12	STUD,WHEEL,M14x1.5
60	0200-331	8	WASHER,4.05x2.1875x0.188
61	0702-210	4	WASHER,4.41x2.00x.104
62	0302-435	2	FITTING,GREASE,1/8 NPT,90D
63	0702-241	4	AXLE,ONE PIECE,CENTER
64	0702-145	2	AXLE,ONE PIECE,END
65	0702-117	1	WLMT,ROD,LH
66	0304-957	1	TENSIONER,TRACK
67	0304-077	1	NUT,HEX,JAM,1 1/4 - 7,RH
68	0702-118	1	WLMT,ROD,RH
69	0300-946	2	FITTING,GREASE,1/8 NPT
70	0702-196	1	ASSY,SPROCKET (SERIAL #699-CURRENT)
71	0702-114	1	RING,RETAINER,INT
72	0303-141	1	SEAL,APY,1.250x2.062x.450
73	0702-112	1	RETAINER,SEAL
74	0702-113	1	O-RING,2-037,2-625 ODx2.5 IDx.
75	0702-251	1	ZERK,GREASE,1/8NPT,HIGH PRESSURE

Item 58 is no longer avalible. If replacement is required, order (0702-305). For additional information see instruction P100-194.

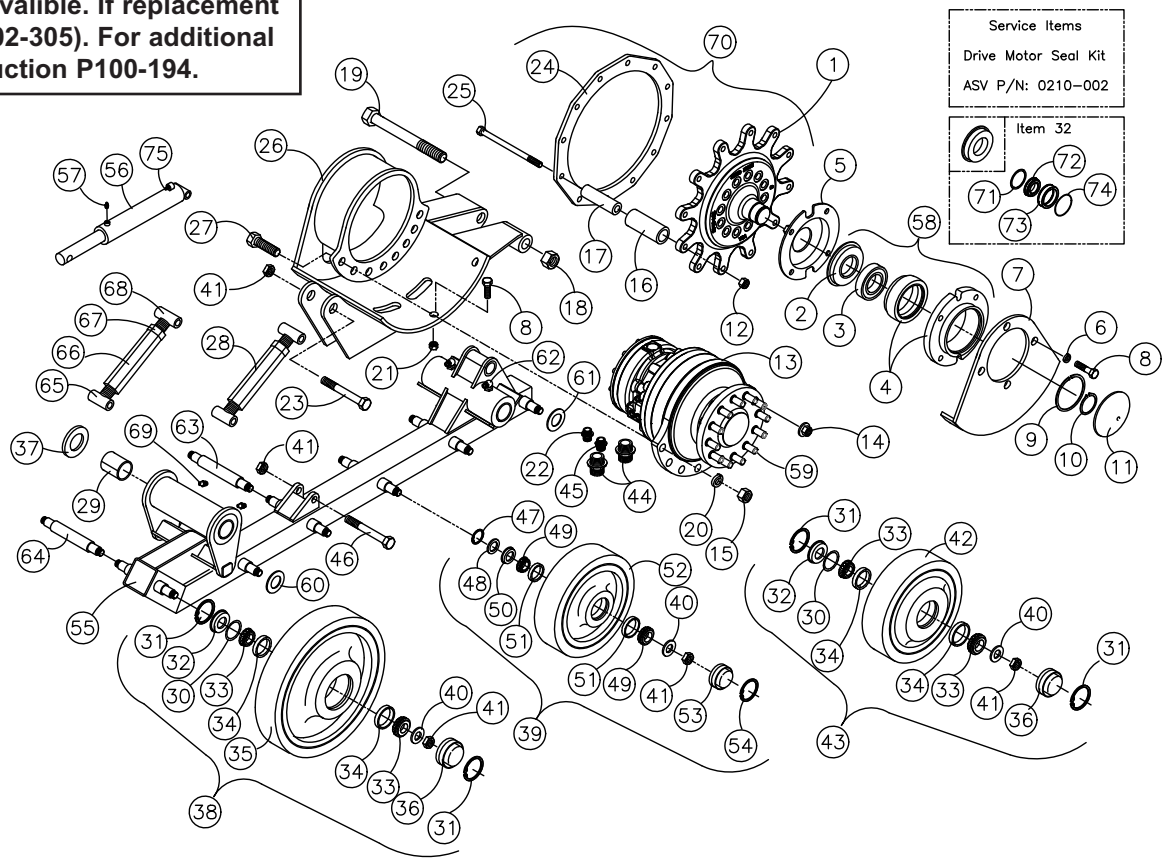

LIFT ARM ASSEMBLY (SN: RSC 00101-2285)

REF. NO.	PART NUMBER	QTY.	DESCRIPTION
1	0200-079	1	WLMT,LOADER
2	0200-306	1	WLMT,STEP-PLATE,LOADER
3	8050-247	2	WASHER,WROUGHT,5/16,SAE,ZN
4	8051-242	2	WASHER,SPRING LOCK,5/16,ZN
5	8001-135	2	CAPSCREW,HH,5/16-18 UNCx1.5,GD
6	8102-226	8	CAPSCREW,HH 3/8-16UNCx1.75 GD8
7	0304-339	2	SCREW,SELF-TAPPING,5/16X1.25
8	0200-115	2	WLMT,PIN,1.00x3.49
9	0304-341	2	CLAMP,TUBE,LOADER, RC-30
10	0300-607	12	ZERK,GREASE,1/4-28
11	8042-486	12	NUT,HEX,3/8-16 UNC,ZN
12	0200-005	2	CYLINDER,BOOM
13	0200-129	1	TUBE,LOADER,0.50x36.50
14	0200-128	1	TUBE,LOADER,0.50x37.80
15	0200-127	1	TUBE,LOADER,0.50x39.60
16	0200-126	1	TUBE,LOADER,0.50x41.50
17	0304-359	1	CLAMP,DOUBLE,LOADER, RC-30
18	0304-665	1	TUBE,AUX,LOWER,LOADER
19	0304-666	1	TUBE,AUX,UPPER,LOADER
20	0304-342	1	TUBE,G,LOADER RC-30
21	0304-340	1	CLAMP,OIL LINE,LOADER RC-30
22	0304-667	2	ADAPTER,8MB-10MJ
23	8102-050	4	CAPSCREW,HH,1/4-20,UNC,2.75ZN,
24	0304-357	1	ADAPTER,9/16-18,JIC-9/16-18,O-
25	0304-876	1	MANIFOLD,AUX,HYD
26	0304-356	1	PLUG,9/16-18,LOADER RC-30
27	0310-240	1	COVER,DUST,1/2,M
28	0310-076	1	COUPLER,QUICK,FF,FEMALE,7/8-14
29	0310-077	1	COUPLER,QUICK,FF,MALE,7/8-14UN
30	0310-241	1	COVER,DUST,1/2,F
31	8040-366	11	NUT,HEX,NYLOCK,1/4-20 UNC,ZN
32	0200-121	2	CYLINDER,BUCKET
33	0304-464	1	TUBE,CLAMP,RUBBER,LOADER RC-30
34	0200-266	1	DECAL,LOADER,RH,RC50
35	0200-267	1	DECAL,LOADER,LH,RC50
36	0200-113	4	WLMT,PIN,1.00x4.51
37	0201-838	1	SPOOL,VALVE,QD BLOCK
38	0200-296	2	ADAPTER,O-RING HEX NIPPLE,10-8
39	0200-388	2	WLMT,PIN,1.00x4.12
40	0200-114	4	WLMT,PIN,1.00x5.51
41	0200-083	8	BUSHING,LOADER,3" (weld-in)
42	0402-886	1	KIT,DUST,COVER,RC60/50
43	0200-553	1	DECAL,LOADER,RH,FRONT,RC50
44	0200-554	1	DECAL,LOADER,LH,FRONT,RC50

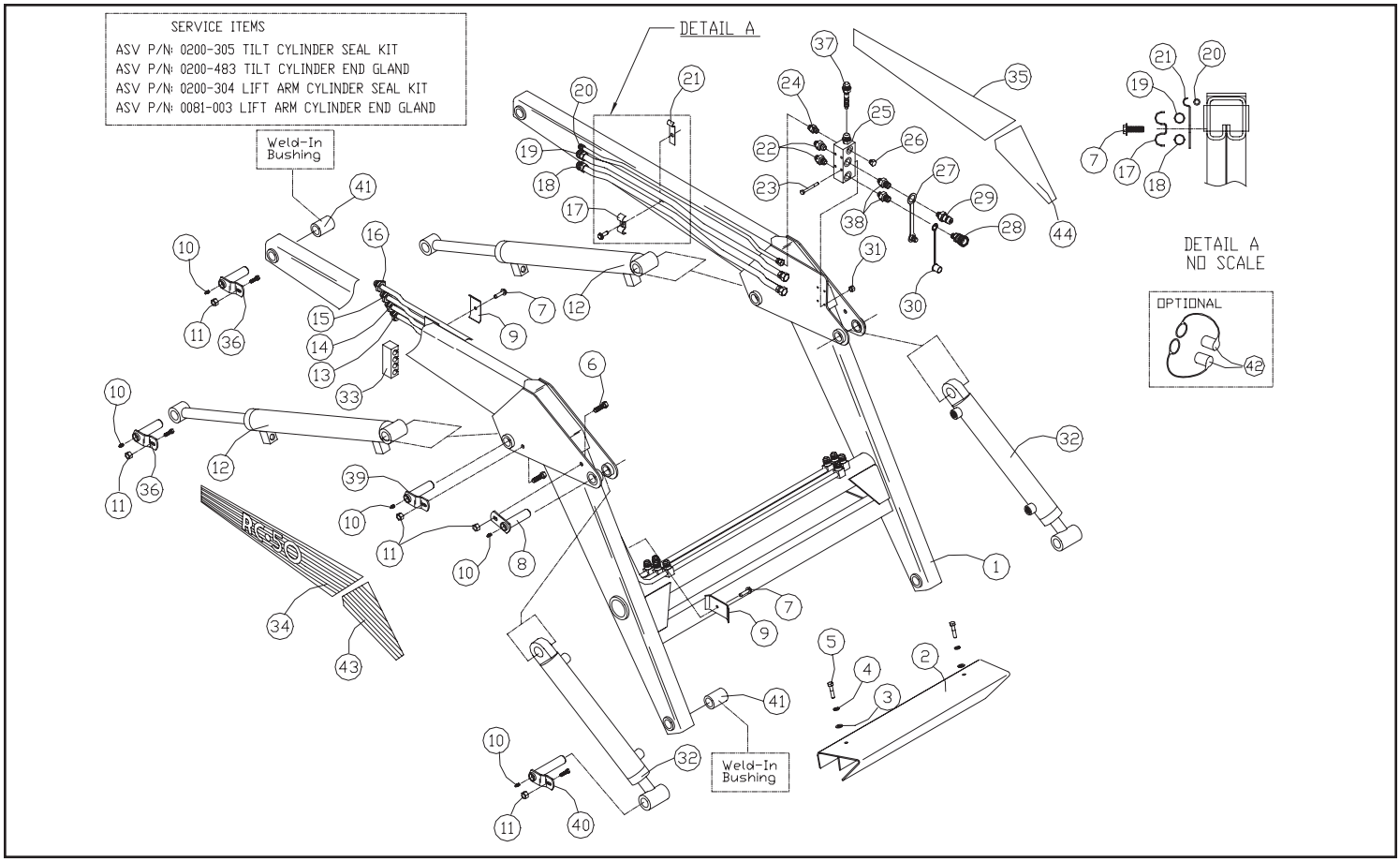

LIFT ARM ASSEMBLY (SN: RSC 02286-Current)

REF. NO.	PART NUMBER	QTY.	DESCRIPTION
1	2030-121	1	DECAL,LOADER,RIGHT,FRONT,RC60
2	0200-597	1	DECAL,LOADER,RIGHT,REAR,RC50
3	0200-113	4	WLMT,PIN,1.00x4.51
4	0300-607	10	ZERK,GREASE,1/4-28
5	8011-222	6	BOLT,CARRIAGE,3/8-16 UNCx1.0,Z
6	0314-269	6	NUT,FLANGE,TOPLK,3/8-16UNC,GDG
7	2030-285	2	CYLINDER,BOOM (Serial # 02744-Current)
8	0304-672	2	PIN,1.00"x3.91"
9	2030-069	2	HOSE,10M4K,10FFORX,10FFORX,28.
10	0201-770	1	CAP,W/CHAIN
11	2030-070	2	HOSE,10M4K,10FFORX,10FFORX,50.
12	0310-345	8	ADAPTER,8MFFOR--8MB
13	2030-035-yel	1	WLMT,LOADER,RC60
14	0200-598	1	DECAL,LOADER,LEFT,REAR,RC50
15	2030-123	1	DECAL,LOADER,LEFT,FRONT,RC60
16	8102-220	2	CAPSCREW,HH,3/8-16x0.75",GD8
17	0201-408	1	DECAL,LOADER,FRONT
18	2030-081	2	WLMT,PIN
19	0201-852	4	WLMT,PIN,6.00"
20	2030-286	1	CYLINDER,BUCKET/TILT,LH (Serial # 02744-Current)
21	8102-222	4	CAPSCREW,HH,3/8-16 UNCx1.0,GD8
22	2030-287	1	CYLINDER,BUCKET/TILT,RH (Serial # 02744-Current)
23	2030-147	2	BUSHING,1.00IDX1.50ODX3.00
24	0003-083	2	BUSHING,BASE,CYLINDER
25	0201-233	2	BUSHING,1.50IDx2.00ODx3.00L
26	0003-053	2	BUSHING,ROD,CYLINDER
27	0003-082	2	BUSHING,BASE,CYLINDER
28	0304-496	1	PAD,SKID
29	0201-392	1	HARNESS,AUXILIARY
30	0201-771	1	HARNESS,ELEC,AUX,RC100/85/60
31	0201-002	4	WLMT,PIN
32	0003-084	2	BUSHING,ROD,CYLINDER

WARNING: When ordering Cylinders
Machines serial number 02286-02743 came equipped with cylinders that are now obsolete. These early cylinders will not work side by side with current cylinders. If a cylinder on one side needs to be replaced, both cylinders must be replaced at that time to maintain proper function and avoid machine damage. (see page III)

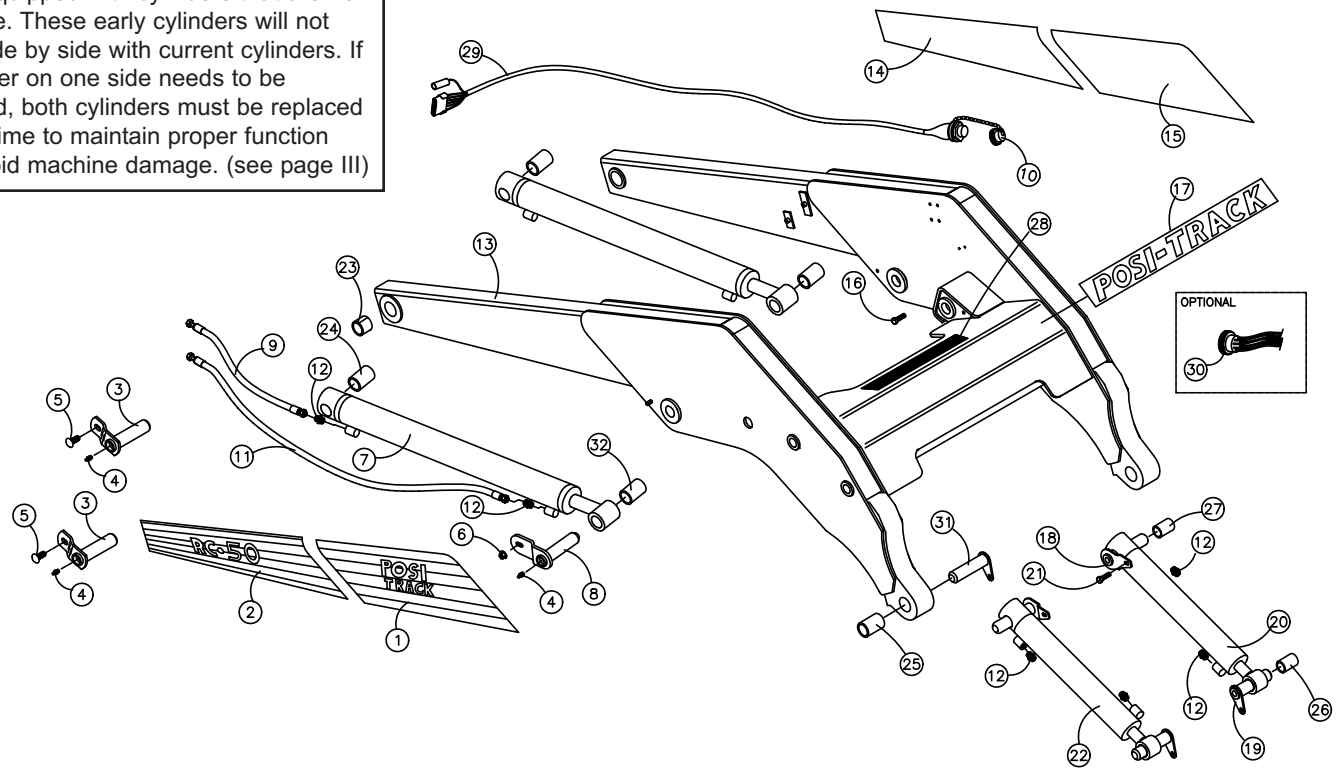

LIFT ARM TUBES AND FITTINGS (SN: RSC 00101-2285)

REF. NO.	PART NUMBER	QTY.	DESCRIPTION
1	0200-186	2	HOSE,6G2,4800 PSI,38.5"
2	0200-187	2	HOSE,6G2,4800 PSI,18"
3	0304-361	4	FITTING,6MB-6MJ90,LOADER RC-30
4	0200-189	2	HOSE,6G2,4800 PSI,22.25"
5	0200-188	2	HOSE,6G2,4800 PSI,47"
6	0300-582	2	CABLE,TIE,SMALL

REF. NO.	PART NUMBER	QTY.	DESCRIPTION

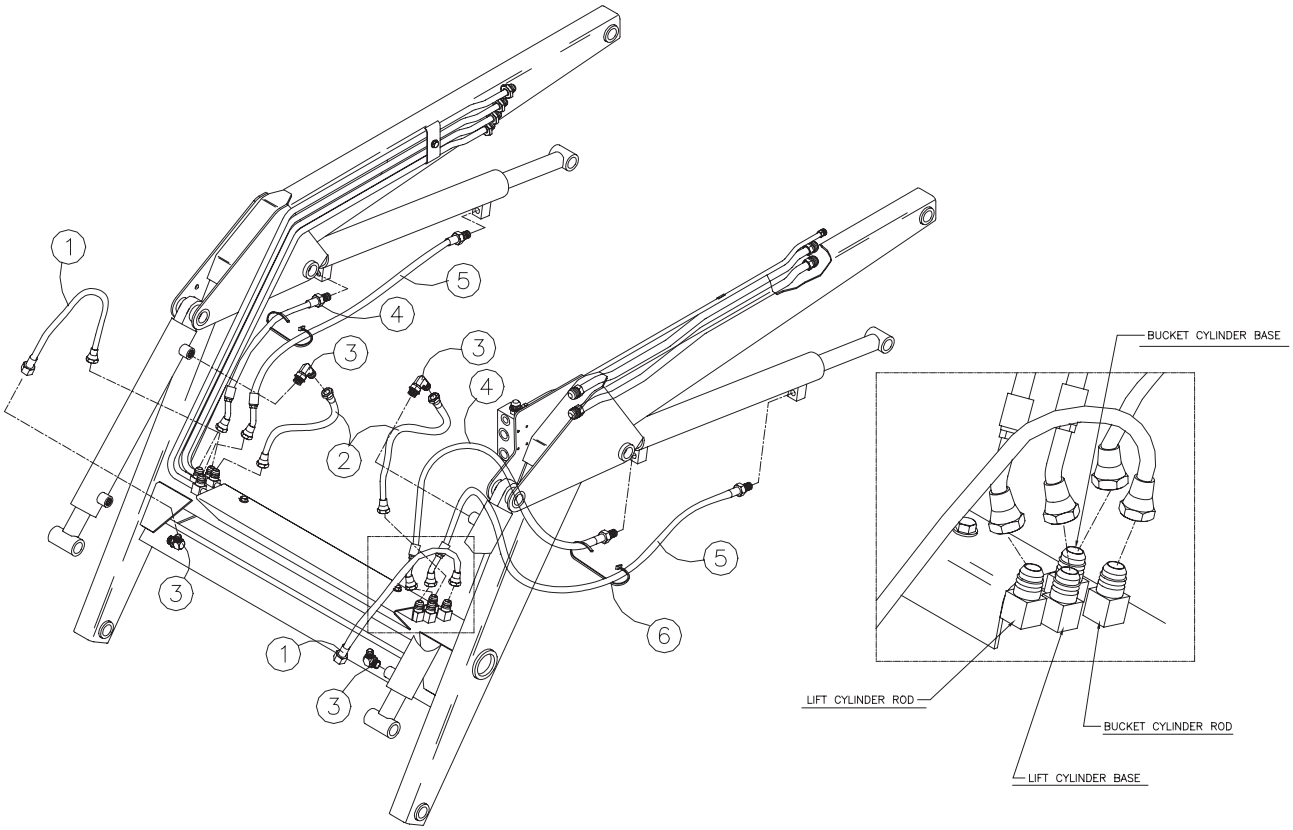

LIFT ARM TUBES AND FITTINGS (SN: RSC 02286-Current)

REF. NO.	PART NUMBER	QTY.	DESCRIPTION
1	2030-010	1	TUBE,BUCKET,LOWER
2	2030-009	1	TUBE,BUCKET,UPPER
3	2030-008	1	TUBE,CASE DRAIN,QD
4	2030-001	1	TUBE,AUX,UPPER,QD
5	2030-002	1	TUBE,AUX,LOWER,QD
6	0310-567	1	ADAPTER,8MFFOR-6MB
7	0310-831	4	CLAMP, SET, T2062-PP
8	0310-584	9	PLATE,COVER TCP-T2
9	8102-134	9	CAPSCREW,HH,5/16-18UNCx1.25GD8
10	0201-658	2	ADAPTER,10MFFOR-8MB-S
11	0304-876	1	MANIFOLD,AUX,HYD
12	8102-050	4	CAPSCREW,HH,1/4-20,UNC,2.75ZN,
13	0304-356	1	PLUG,9/16-18,LOADER RC-30
14	0200-296	2	ADAPTER,O-RING HEX NIPPLE,10-8
15	8040-366	4	NUT,HEX,NYLOCK,1/4-20 UNC,ZN
16	0310-076	1	COUPLER,QUICK,FF,FEMALE,7/8-14
17	0310-077	1	COUPLER,QUICK,FF,MALE,7/8-14UN
18	0310-241	1	COVER,DUST,1/2,F
19	0310-240	1	COVER,DUST,1/2,M
20	0201-402	5	CLAMP,SET,2050-PP
21	0201-224	7	COVER,CLAMP,COP-2
22	8102-044	14	CAPSCREW,HH,1/4-20UNCx1.25,GD8
23	0201-223	2	CLAMP,SET,2062-PP
24	0201-488	2	HOSE,8M4K,23.50"
25	0201-489	2	HOSE,8M4K,17.50"
26	0201-838	1	SPOOL,VALVE,QD BLOCK
27	0402-886	1	KIT,DUST,COVER,RC60/50

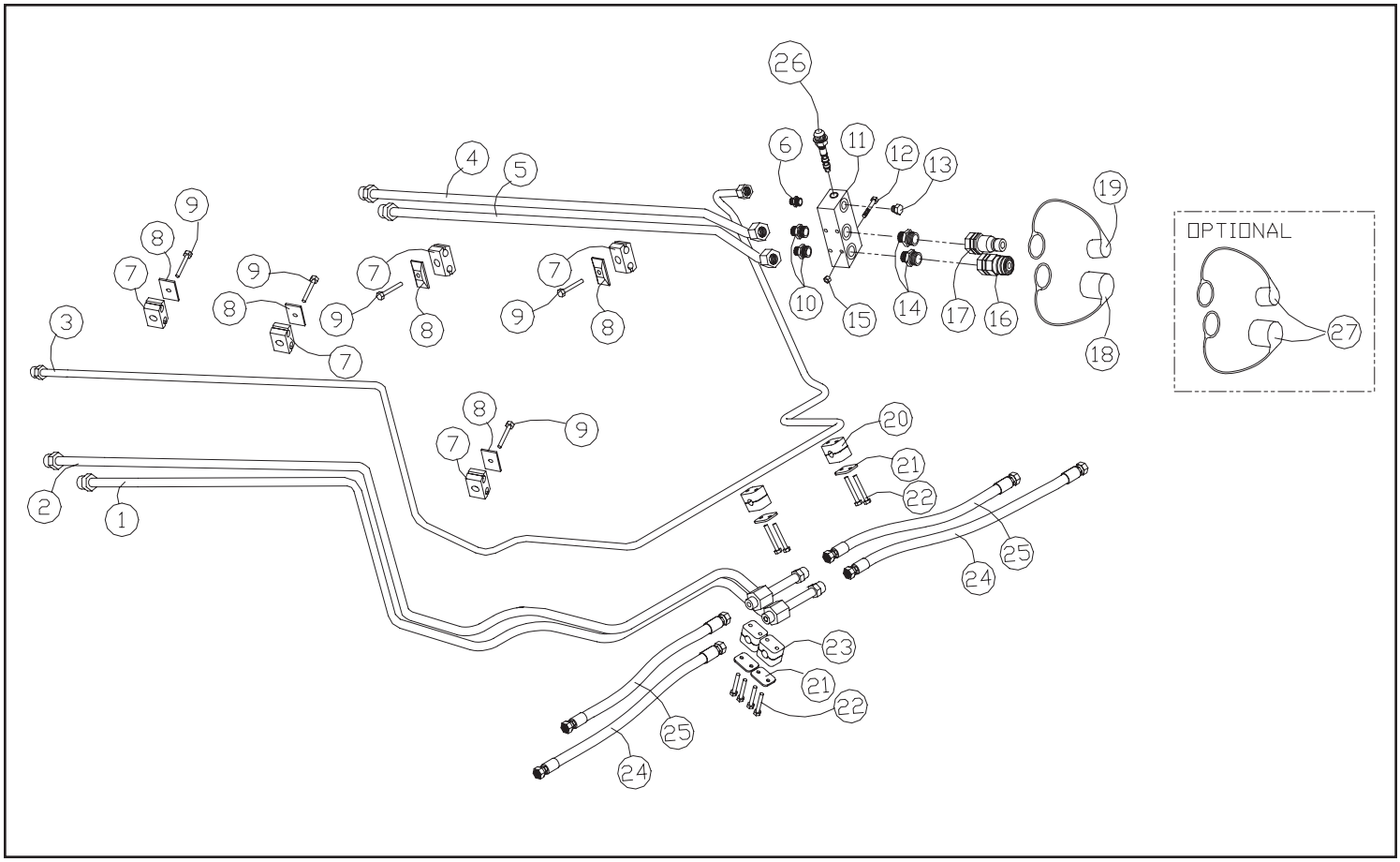

QUICK ATTACH ASSEMBLY (SN: RSC 00101-2285)

REF. NO.	PART NUMBER	QTY.	DESCRIPTION
1	8002-418	2	CAPSCREW,HH,1/2-13 UNCx6.0,GD5
2	0400-620	1	WLMT,PIN,LATCH,LH
3	0400-621	2	SPOOL,PIVOT
4	0400-651	2	SPRING,COMPRESSION
5	8050-347	8	WASHER,WROUGHT,1/2,STD,ZN
6	0400-653	2	CAPSCREW,SHOULDER,.5 x.63x3/8-
7	0400-617	2	BLOCK,LATCH
8	8002-222	2	CAPSCREW,HH,3/8-16 UNCx1.0,GD5
9	8051-272	2	WASHER,SPRING LOCK,3/8,ZN
10	8050-277	2	WASHER,WROUGHT,3/8,SAE,ZN
11	0400-697	1	LEVER,LATCH,LH
12	0400-652	2	SPRING,COMPRESSION,.88 x .88 x
13	0400-632	1	WLMT,QUICK-ATTACH
14	0400-634	4	SLIDE,PLASTIC,QUICK-ATTACH
15	0400-676	1	WLMT,PIN,LATCH,RH
16	0400-698	1	LEVER,LATCH,RH
17	0400-629	2	STAND-OFF,LEVER,LATCH

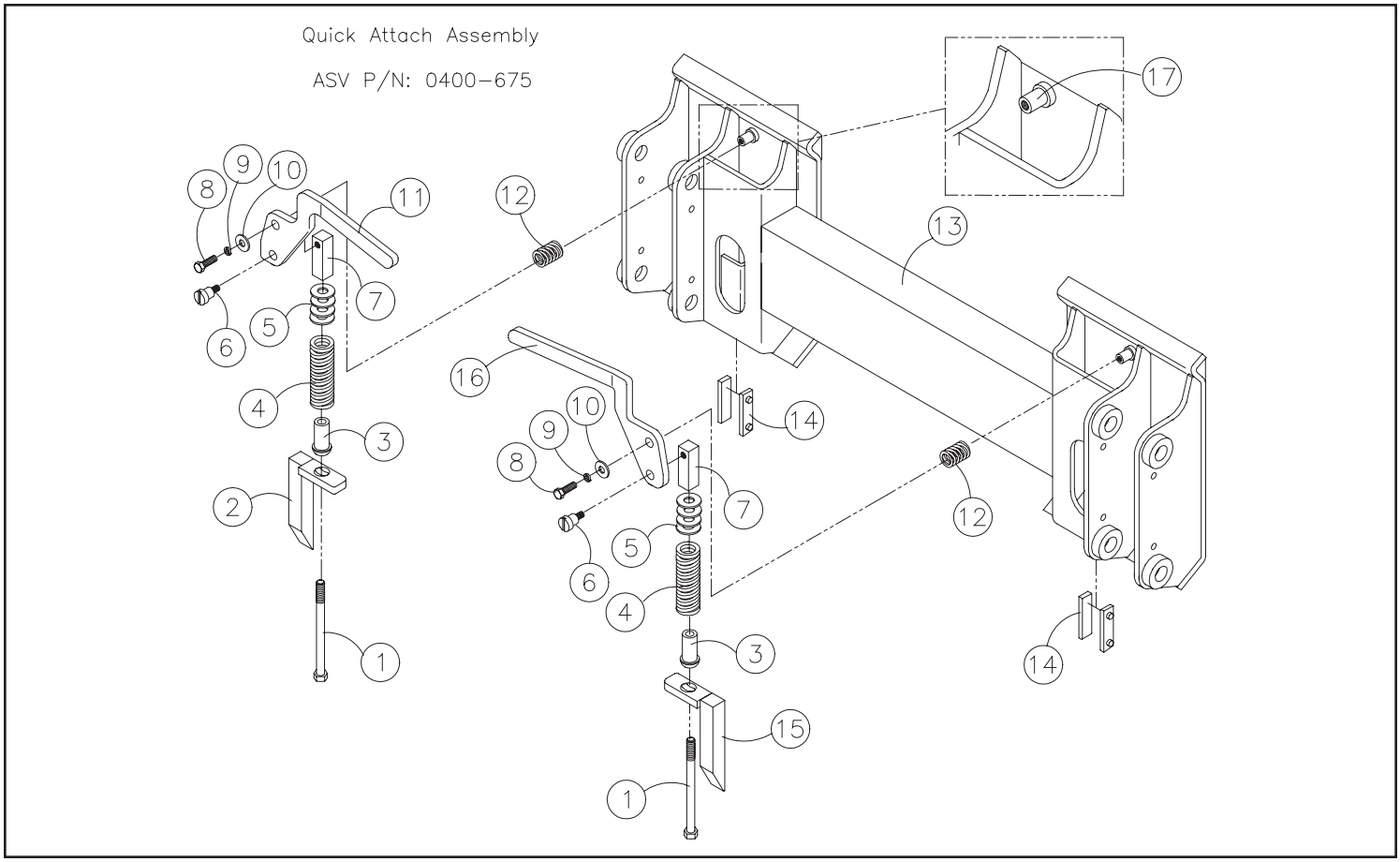

QUICK ATTACH ASSEMBLY (SN: RSC 02286-Current)

REF. NO.	PART NUMBER	QTY.	DESCRIPTION
1	2045-359	1	WLMT,QUICK-ATTACH,MANUAL
2	2045-761	1	HANDLE,QA,LH
3	2045-762	1	HANDLE,QA,RH
4	2045-242	1	WLMT PIN RH
5	2045-243	1	WLMT PIN LH
6	2045-245	2	BLOCK LATCH
7	8102-418	2	CAPSCREW,HH,1/2-13UNCx 6.0,GD8
8	0090-002	2	BOLT,SHOULDER,5/8"x.625" GD 8
9	8050-347	4	WASHER,WROUGHT,1/2,STD,ZN
10	2015-018	2	WASHER,FENDER,1.75x0.53x0.125
11	8051-620	6	WASHER,SPRING LOCK,1.0,ZN
12	0400-621	2	SPOOL,PIVOT
13	0304-799	2	CAPSCREW,HH,1/2-13UNCx3.75,GD8
14	8040-606	2	NUT,HEX,NYLOCK,1/2-13 UNC,ZN
15	0400-651	2	SPRING,COMPRESSION
16	0300-607	2	ZERK,GREASE,1/4-28

REF. NO.	PART NUMBER	QTY.	DESCRIPTION

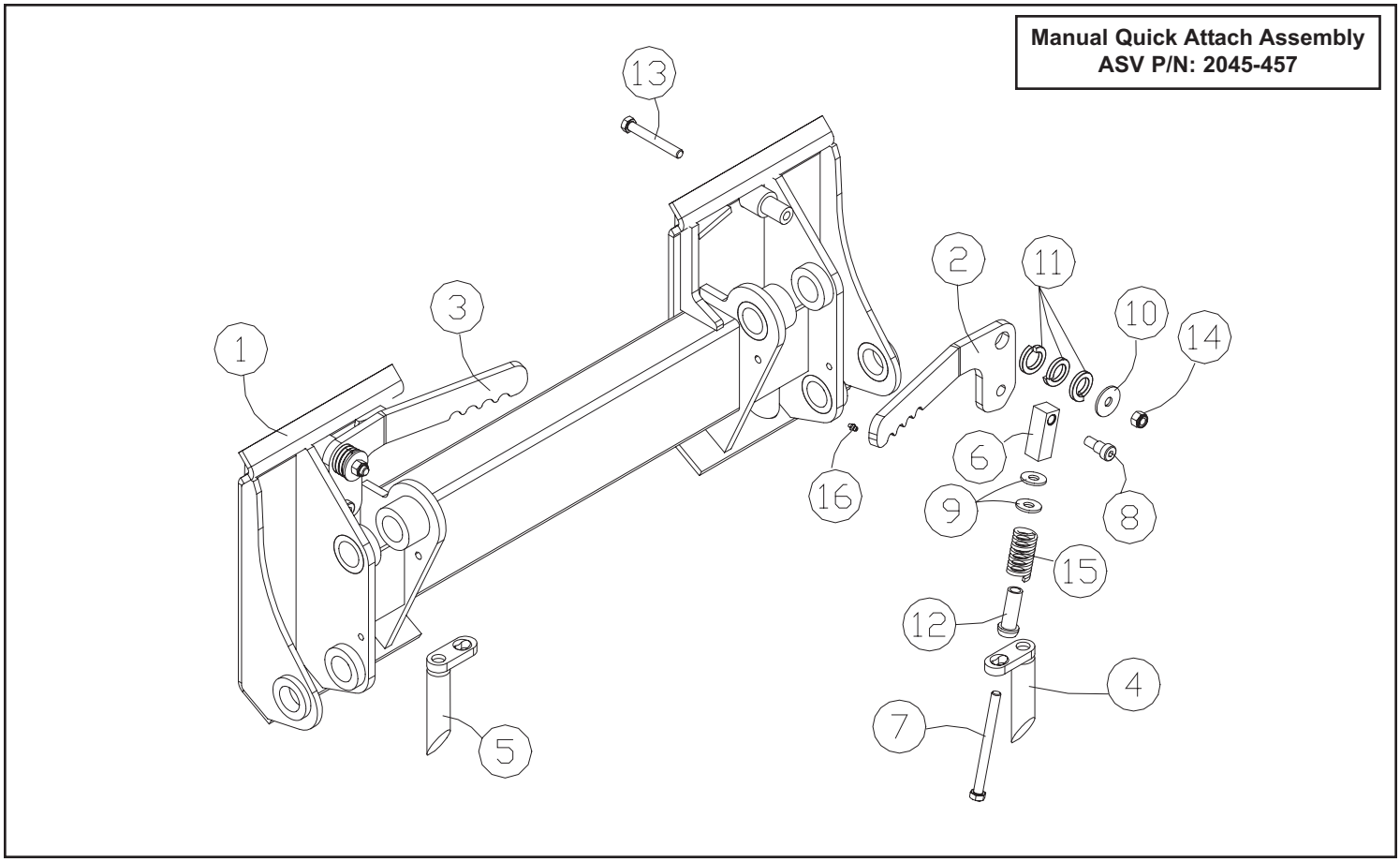

CAB HEATER ASSEMBLY (SN: RSC 00101-Current)

REF. NO.	PART NUMBER	QTY.	DESCRIPTION
1	0304-546	1	HEATER,CAB, RC-30
2	0304-548	2	MNT,HEATER
3	0305-214	1	HOSE,HEATER,5/8 x 33"
4	0304-553	1	HOSE,HEATER,5/8,72"
5	0304-554	1	HOSE,HEATER,5/8,38"
6	0301-558	1	VALVE,FLOW,HEATER
7	0401-975	1	CABLE,PUSH-PULL,HEATER
8	0301-514	1	KNOB,SWITCH,HEATER
9	8102-038	2	CAPSCREW,HH 1/4-20UNCx7/8 GRD8
10	8040-366	2	NUT,HEX,NYLOCK,1/4-20 UNC,ZN
11	0301-654	1	NUT,JAM,3/8-24 UNF
12	0301-110	6	CLAMP,HOSE,#8
13	0310-838	1	CLAMP,TUBE,DOUBLE,1.0
14	0304-670	1	ADAPTER,5/8BARB-3/8MPT-90^
15	0304-570	1	ADAPTER,6MP-10HOSE,BARB
16	0307-720	1	CAPSCREW,HH,M8x1.25x20
17	8051-242	1	WASHER,SPRING LOCK,5/16,ZN
18	8050-277	1	WASHER,WROUGHT,3/8,SAE,ZN
19	0304-575	1	HARNESS,HEATER
20	0304-122	1	SWITCH,ON/OFF,HEATER
21	0310-587	4	CLAMP,WIRE,3/8,ADHESIVE
22	2045-748	2	GROMMET,RUBBER,1-3/8"
23	8050-222	6	WASHER,WROUGHT,1/4,STD,ZN
24	0310-713	1	GASKET, SWITCH
25	8102-039	4	CAPSCREW,HH,1/4-20UNCx.625,GD8
26	8051-212	4	WASHER,SPRING LOCK,1/4,ZN

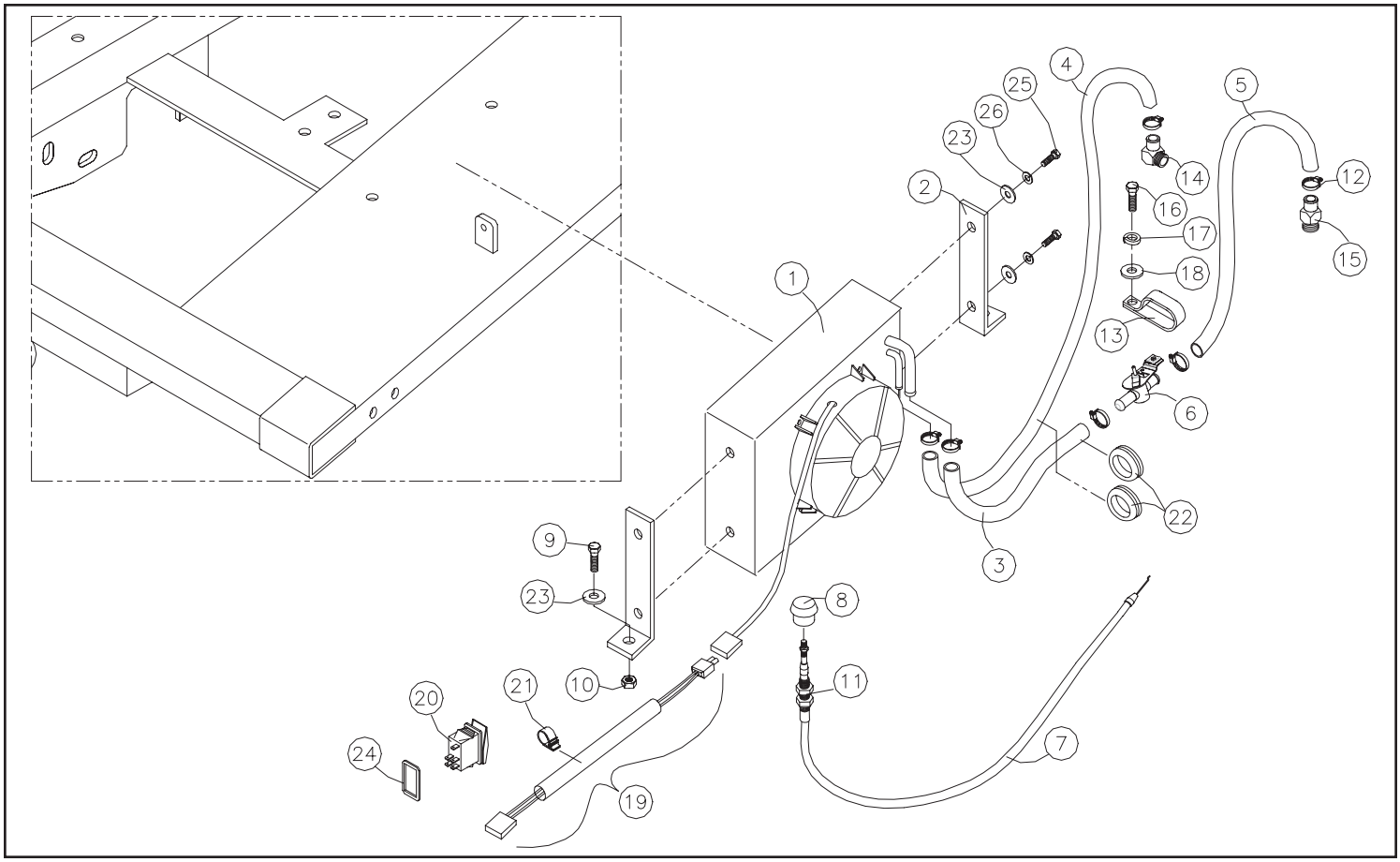

HEATER/AIR CONDITIONING ASSEMBLY (SN: RSC 00101-Current)

REF. NO.	PART NUMBER	QTY.	DESCRIPTION
1	8102-139	1	CAPSCREW,HH5/16-18UNCx2.50 GD8
2	8051-242	3	WASHER,SPRING LOCK,5/16,ZN
3	8050-222	1	WASHER,WROUGHT,1/4,STD,ZN
4	0201-573	1	SPACER,TUBE,.75x.5x1
5	0782-019	1	DRYER
6	0201-628	1	SPACER,CLAMP
7	0782-048	2	HOSE,A/C,#6,92.00"
8	0782-053	2	HOSE,A/C,#6,55.50"
9	0314-269	3	NUT,FLANGE,TOPLK,3/8-16UNC,GDG
10	8050-277	1	WASHER,WROUGHT,3/8,SAE,ZN
11	0782-064	1	WLMT,MNT,COMPRESSOR
12	8050-262	3	WASHER,WROUGHT,5/16,STD,ZN
13	8102-225	2	CAPSCREW,HH,3/8-16 UNCx1.5,GD8
14	8102-236	1	CAPSCREW,HH,3/8-16UNCx5.0 GD8,
15	8102-132	1	CAPSCREW,HH,5/16-18UNCx1.0 GD8
16	0200-507	1	SPACER,FAN,3024C,A/C
17	0200-508	1	PULLEY,ADDITIONAL,CRANKSHAFT,3
18	0304-670	1	ADAPTER,5/8BARB-3/8MPT-90
19	0782-049	2	HOSE,A/C,#10,98.50"
20	0782-052	2	HOSE,A/C,#8,64.80"
21	0782-038	1	COMPRESSOR,AC,RC
22	0201-645	1	BELT,V, A SERIES, 1/2 x 48.00
23	0782-088	1	RELAY,CONDENSER,12V
24	0782-078	1	COIL,CONDENSER
25	0782-070	1	MNT,CONDENSER,ROOFTOP
26	0301-558	1	VALVE,FLOW,HEATER
27	0782-066	1	VALVE,EXPANSION,905
28	0782-067	2	ASSY,BLOWER
29	0782-073	1	COVER,AC
30	0782-072	1	SWITCH,TOGGLE,AC
31	0782-082	2	KNOB
32	0782-075	1	CABLE,CONTROL
33	0782-037	3	LOUVER,A/C,PERRIN
34	0782-060	4	LOUVER,ROUND,AC,RC50
35	0782-085	1	ASSY,FAN
36	0782-069	2	RESISTOR
37	0782-068	1	THERMOSTAT,AC
38	0782-081	1	COVER,HOUSING
39	0782-089	1	ASSY,EVAPORATOR
40	0200-527	1	TEE,5/8,BARBED
41	0782-065	1	ARM,TENSION,COMPRESSOR

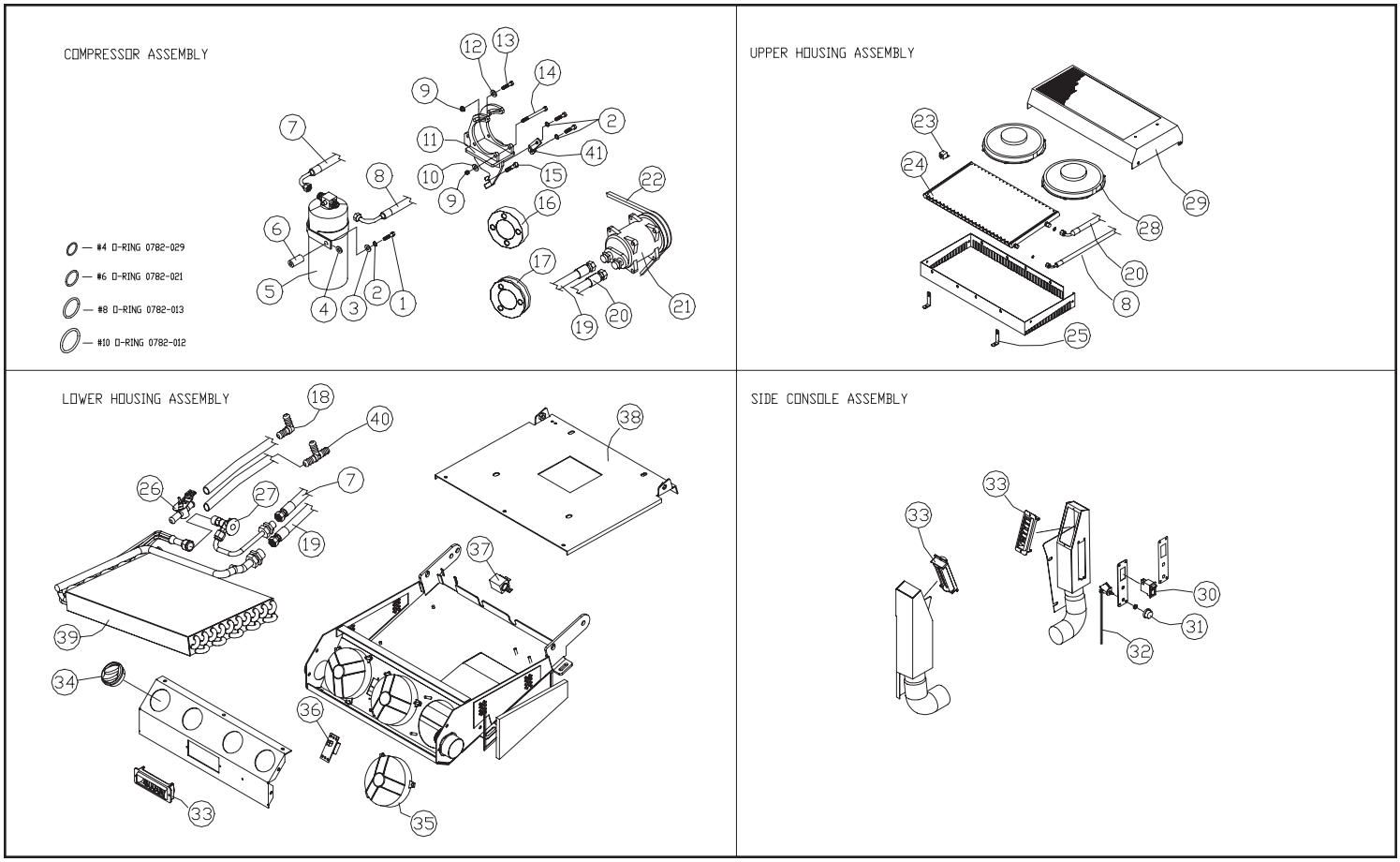

TRACK INSTALLATION TOOL (SN: RSC 00101-Current)

REF. NO.	PART NUMBER	QTY.	DESCRIPTION
1	0702-214	1	ASSY,INSTALLATION,TRACK
2	0702-171	1	WLMT,HOOK,TRACK
3	8102-235	1	CAPSCREW,HH,3/8-16UNCx4.5,GD8,
4	8102-232	1	CAPSCREW,HH,3/8-16,UNCx3.25,GD
5	0702-175	1	WLMT,TRACK,HANDLE
6	0702-143	1	CAP,3/4-10
7	0702-180	1	WLMT,CATCH,TRACK
8	8040-486	2	NUT,HEX,NYLOCK,3/8-16 UNC,ZN
9	0702-219	1	INSERT,WHEEL

REF. NO.	PART NUMBER	QTY.	DESCRIPTION

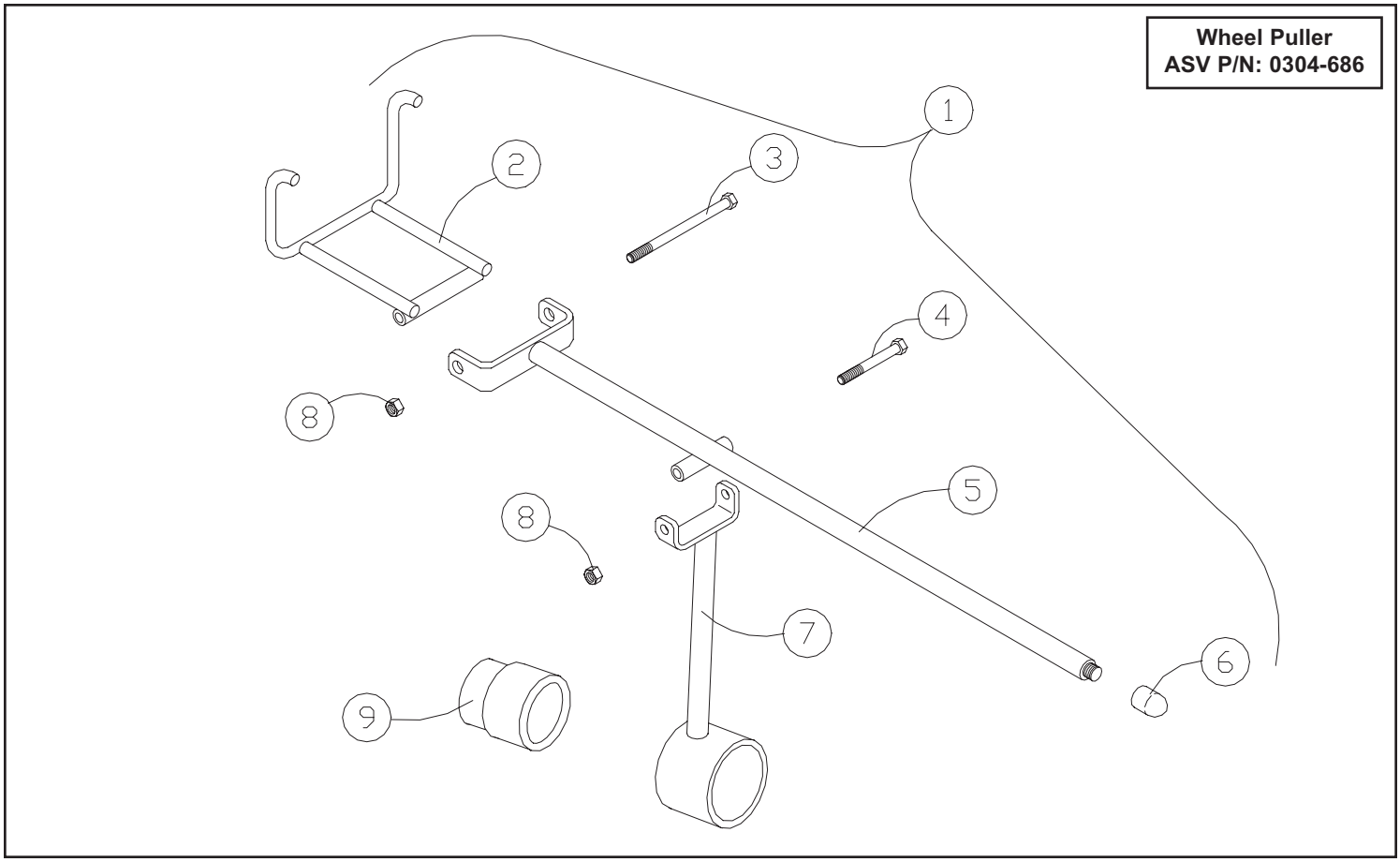

Terex Construction Americas
8800 Rostin Road
Southaven, MS 38671
(888)-201-6008
(662)-393-1800
www.terex.com