# Master Parts Manual

## ST-50
## Rubber Track Utility Vehicle

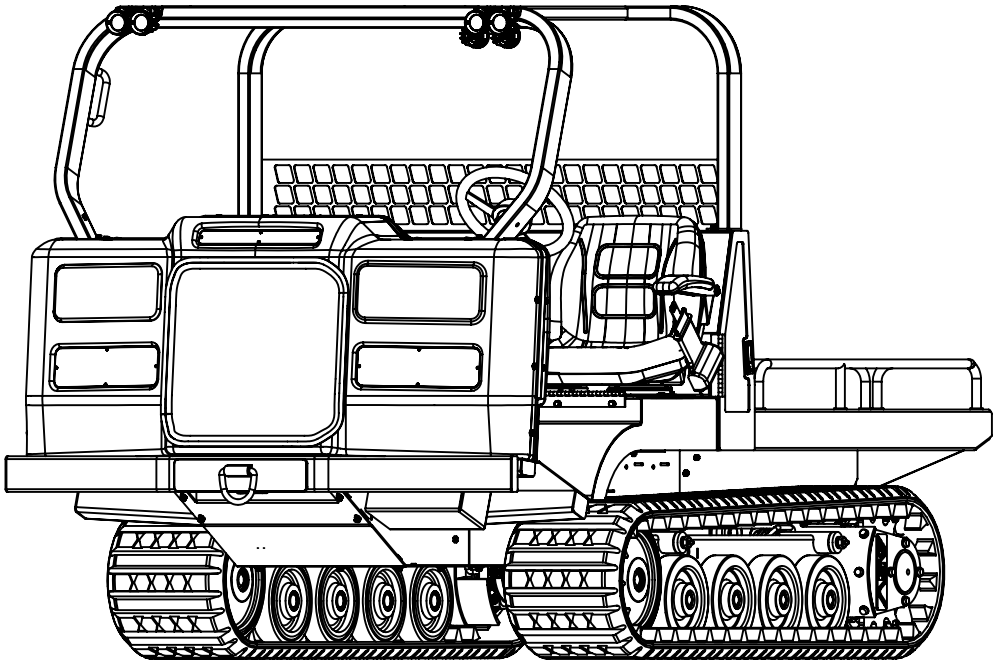

**Part Number: 2052-456**
**Printed (3/08)**

# Table of Contents


1. **Standard Cab Facia Assembly**
   Serial # CFA 00318-Current* . . . . . **1A-A**

   **Red Cab Facia Assembly**
   (Optional) Serial # CFA 00318-Current* . . . . **1A-B**

   **Green Cab Facia Assembly**
   (Optional) Serial # CFA 00318-Current* . . . . **1A-C**

   **White Cab Facia Assembly**
   (Optional) Serial # CFA 00318-Current* . . . . **1A-D**

2. **Cab Interior**
   Serial # CFA 00318-Current* . . . . . **2-A**

3. **Chassis/(R.O.P.S.) Assembly**
   Serial # CFA 00318-Current* . . . . . **3-A**

4. **Radiator/Oil Cooler Assembly**
   Serial # CFA 00318-Current* . . . . . **4-A**

5. **Hydraulic Reservoir Assembly**
   Serial # CFA 00318-Current* . . . . . **5-A**

6. **Hydraulic Control Assembly**
   Serial # CFA 00318-Current* . . . . . **6-A**

7. **Pilot Generation Block**
   Serial # CFA 00318-Current* . . . . . **7-A**

8. **Hydraulic Drive Assembly**
   Serial # CFA 00318-Current* . . . . . **8-A**

9. **Hydraulic Auxiliary Assembly**
   (Optional) Serial # CFA 00318-Current* . . . . **9-A**

10. **Two-Speed/Brake Manifold**
    Serial # CFA 00318-Current* . . . . . **10-A**

11. **Auxiliary Manifold**
    (Optional) Serial # CFA 00318-Current* . . . . **11-A**

12. **Engine Assembly**
    Serial # CFA 00318-Current* . . . . . **12-A**

13. **Intake/Exhaust Assemblies**
    Serial # CFA 00318-Current* . . . . . **13-A**

14. **Battery Assembly**
    Serial # CFA 00318-Current* . . . . . **14-A**

15. **Fuse Panel Assembly**
    Serial # CFA 00318-Current* . . . . . **15-A**

16. **Torsion Axle Assembly**
    Serial # CFA 00318-Current* . . . . . **16-A**

17. **Undercarriage Assembly**
    Serial # CFA 00318-Current* . . . . . **17-A**

18. **Snow Blade Assembly**
    (Optional) Serial # CFA 00318-Current* . . . . **18-A**

19. **Personnel Carrier Assembly**
    (Optional) Serial # CFA 00318-Current* . . . . **19-A**


* Current refers to the machines being produced at the time this manual was printed. See manual cover for print date.

# GENERAL SERVICE ITEMS & LUBRICANTS

| ITEM | MANUFACTURER/DESCRIPTION | ASV P/N |
|---|---|---|
| -Engine Oil Filter | Perkins | 0200-377 |
| -Primary Air Filter | Donaldson (P609218-016-140) | 2052-454 |
| -Secondary Air Filter | Donaldson (P602427-016-140) | 2052-455 |
| -Diesel Fuel Filter | Perkins (26560017) | 0200-213 |
| -Antifreeze/Coolant (1 gal.) | Ethylene Glycol (long life) | 0300-766 |
| -Antifreeze/Coolant (Case/6 gal.) | Ethylene Glycol (long life) | 0402-841 |
| -Engine Oil (1 qt.) | Multi-Grade 10W-30 | 0300-767 |
| -Engine Oil (Case/12 qt.) | Multi-Grade 10W-30 | 0402-838 |
| -Engine Oil (1 gal.) | Multi-Grade 10W-30 | 0402-839 |
| -Engine Oil (Case/6 gal.) | Multi-Grade 10W-30 | 0402-840 |
| -Grease (1 Tube) | Multi-Purpose Lithium | 0300-769 |
| -Grease (Box/10 Tubes) | Multi-Purpose Lithium | 0402-844 |
| -Grease (Case/40 Tubes) | Multi-Purpose Lithium | 0402-834 |
| -Wheel Lube (8 oz. Bottle) | Undercarriage Wheel Bearing Lube | 0402-842 |
| -Wheel Lube (Case/10 Bottles) | Undercarriage Wheel Bearing Lube | 0402-843 |

# HYDRAULIC SERVICE ITEMS & LUBRICANTS

| ITEM | DESCRIPTION | ASV P/N |
|---|---|---|
| -Hydraulic Oil Filter | ASV hyd. filter | 0200-204 |
| -Hydraulic Oil (5 gal.) | All Season MV | 0400-253 |
| -Hydraulic Oil (55 gal.) | All Season MV | 0402-833 |

| O-RING | ASV P/N |
|---|---|
| -# 4, Flat Face Type | 2055-196 |
| -# 6, Flat Face Type | 0310-285 |
| -# 8, Flat Face Type | 0310-286 |
| -# 10, Flat Face Type | 0310-287 |
| -# 12, Flat Face Type | 0310-288 |
| -# 16, Flat Face Type | 0310-289 |
| -# 20, Flat Face Type | 0310-290 |
| -# 24, Flat Face Type | 0201-479 |
| -# 4, ORB Type | 0314-366 |
| -# 6, ORB Type | 0310-619 |
| -# 8, ORB Type | 0307-353 |
| -# 10, ORB Type | 0310-620 |
| -# 12, ORB Type | 0310-621 |
| -# 16, ORB Type | 0307-354 |
| -# 20, ORB Type | 0310-832 |

# STANDARD CAB FASCIA (Serial #: CFA 00318-Current)

| REF. NO. | PART NUMBER | QTY. | DESCRIPTION |
|---|---|---|---|
| 1 | 2051-741 | 2 | WLMT SCREEN INTAKE LARGE |
| 2 | 2051-747 | 1 | WLMT PLATE SIDE BED RH |
| 3 | 2051-746 | 1 | WLMT PLATE SIDE BED LH |
| 4 | 2051-739 | 1 | WLMT SCREEN INTAKE SMALL |
| 5 | 2051-557 | 14 | SCREW #8 SELF TAPPING |
| 6 | 2051-166 | 1 | SHROUD FRONT |
| 7 | 2051-474 | 1 | TRIM H-CHANNEL |
| 8 | 2051-690 | 1 | GROMMET BLIND |
| 9 | 8041-801 | 14 | NUT,HEX,NYLOCK, 6-32 |
| 10 | 0302-965 | 14 | WASHER,RIVET,#7 |
| 11 | 2052-423 | 1 | DECAL ST-50 3 1/2" TALL |
| 12 | 2052-424 | 1 | DECAL ST-50 SWOOSH FRONT LOWER LFT |
| 13 | 2052-425 | 1 | DECAL ST-50 SWOOSH FRONT LOWER RFT |
| 14 | 2052-421 | 1 | DECAL ASV 14" LONG |
| 15 | 2052-433 | 1 | DECAL ST-50 SWOOSH PASSENGER SIDE |
| 16 | 2052-430 | 1 | DECAL ST-50 SWOOSH DRIVER SIDE |
| 17 | 2052-288 | 1 | SEAL FRONT SHROUD |
| 18 | 2052-431 | 1 | DECAL ST-50 SWOOSH PASSENGER SIDE |
| 19 | 2052-428 | 1 | DECAL ST-50 SWOOSH DRIVER SIDE |
| 20 | 2052-432 | 1 | DECAL ST-50 SWOOSH PASSENGER SIDE |
| 21 | 2052-429 | 1 | DECAL ST-50 SWOOSH DRIVER SIDE |
| 22 | 2046-090 | 1 | DECAL TOWER RH |
| 23 | 2052-422 | 2 | DECAL ASV 8 1/2" LONG |
| 24 | 2045-467 | 2 | DECAL WARNING TRACKS |

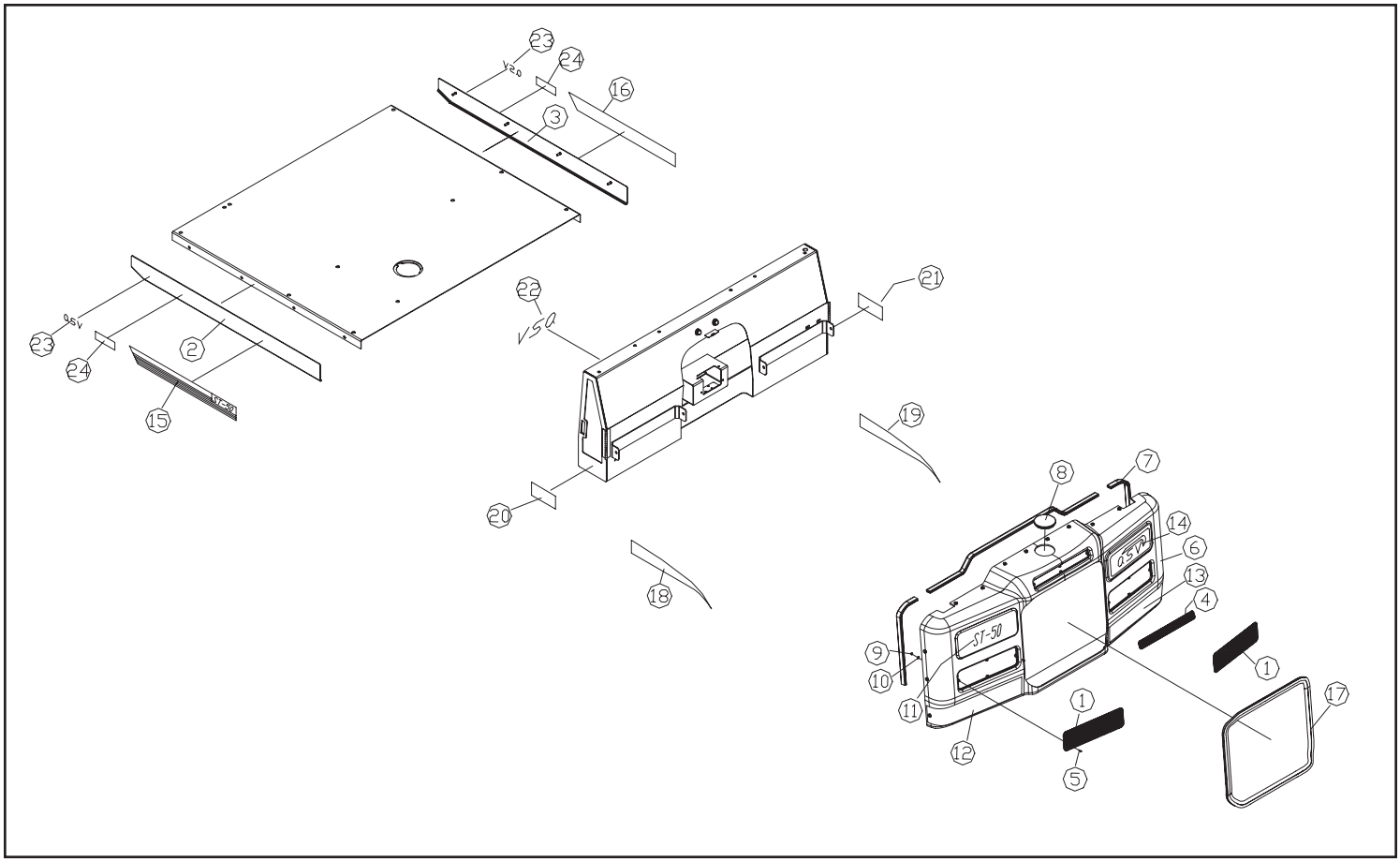

# RED CAB FASCIA (OPTIONAL) (Serial #: CFA 00318-Current)

| REF. NO. | PART NUMBER | QTY. | DESCRIPTION |
|---|---|---|---|
| 1 | 2052-317 | 2 | WLMT SCREEN INTAKE LARGE |
| 2 | 2052-309 | 1 | WLMT PLATE SIDE BED RHT RED |
| 3 | 2052-308 | 1 | WLMT PLATE SIDE BED LFT RED |
| 4 | 2052-316 | 1 | WLMT SCREEN INTAKE SMALL |
| 5 | 2051-557 | 14 | SCREW #8 SELF TAPPING |
| 6 | 2052-304 | 1 | ASSY SHROUD FRONT RED |
| 7 | 2051-474 | 1 | TRIM H-CHANNEL |
| 8 | 2051-690 | 1 | GROMMET BLIND |
| 9 | 8041-801 | 14 | NUT,HEX,NYLOCK, 6-32 |
| 10 | 0302-965 | 14 | WASHER,RIVET,#7 |
| 11 | 2052-423 | 1 | DECAL ST-50 3 1/2" TALL |
| 12 | 2052-424 | 1 | DECAL ST-50 SWOOSH FRONT LOWER LFT |
| 13 | 2052-425 | 1 | DECAL ST-50 SWOOSH FRONT LOWER RFT |
| 14 | 2052-421 | 1 | DECAL ASV 14" LONG |
| 15 | 8040-606 | 4 | NUT,HEX,NYLOCK,1/2-13 UNC,ZN |
| 16 | 2051-914 | 2 | ARMRESTS |
| 17 | 2052-288 | 1 | SEAL FRONT SHROUD |
| 18 | 2052-431 | 1 | DECAL ST-50 SWOOSH PASSENGER SIDE |
| 19 | 2052-428 | 1 | DECAL ST-50 SWOOSH DRIVER SIDE |
| 20 | 2052-432 | 1 | DECAL ST-50 SWOOSH PASSENGER SIDE |
| 21 | 2052-429 | 1 | DECAL ST-50 SWOOSH DRIVER SIDE |
| 22 | 2046-090 | 1 | DECAL TOWER RH |
| 23 | 2052-422 | 2 | DECAL ASV 8 1/2" LONG |
| 24 | 2045-467 | 2 | DECAL WARNING TRACKS |
| 25 | 2052-433 | 1 | DECAL ST-50 SWOOSH PASSENGER SIDE |
| 26 | 2052-430 | 1 | DECAL ST-50 SWOOSH DRIVER SIDE |
| 27 | 2010-127 | 2 | SWITCH,SEAT (NEW STYLE) |
| 28 | 8102-402 | 4 | CAPSCREW,HH 1/2-13 UNCx1.0 GD8 |
| 29 | 2051-913 | 2 | SEAT BLACK W/O ARMRESTS |
| 30 | 2045-499 | 1 | ASSY BELT |

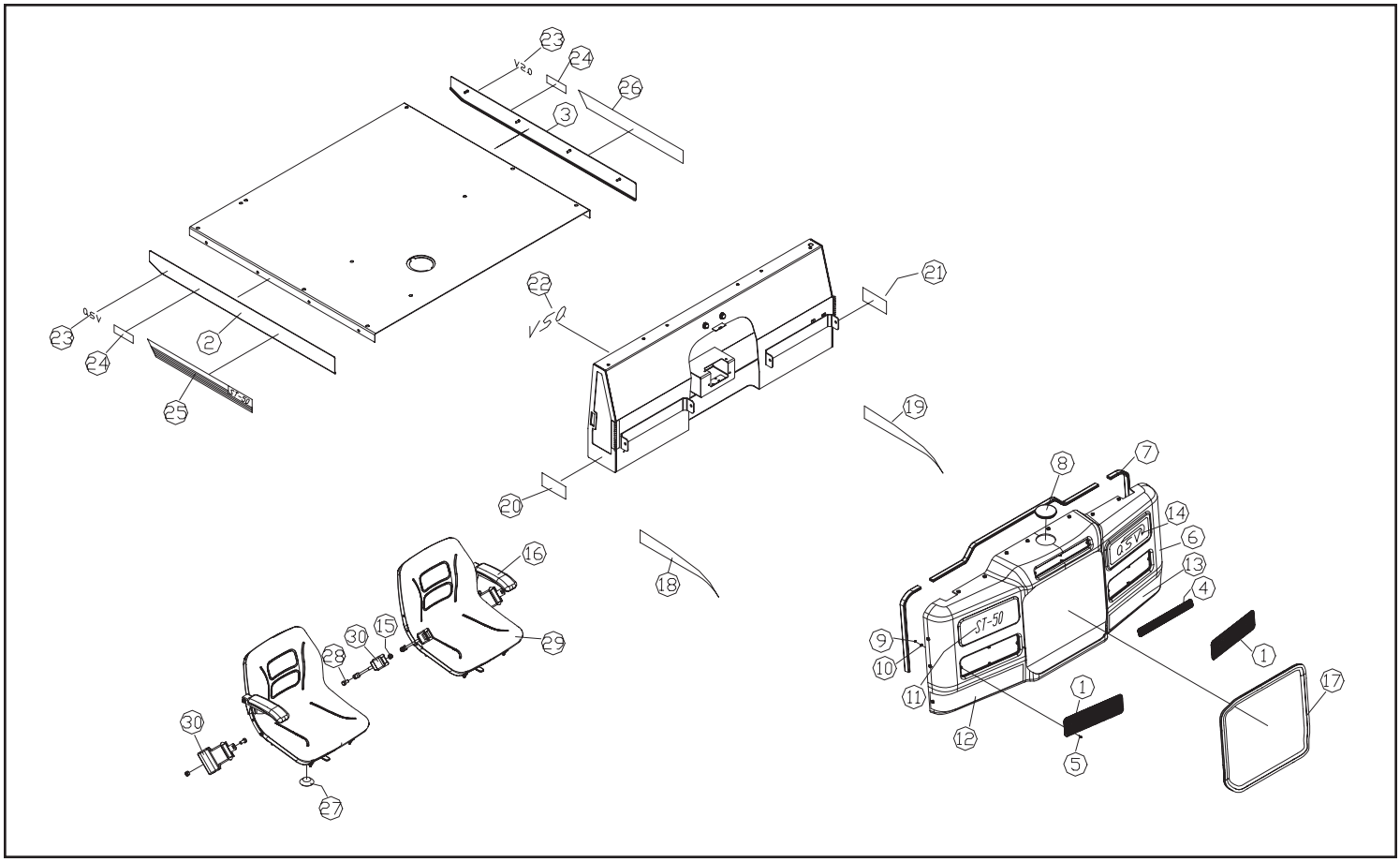

# GREEN CAB FASCIA (OPTIONAL) (Serial #: CFA 00318-Current)

| REF. NO. | PART NUMBER | QTY. | DESCRIPTION |
|---|---|---|---|
| 1 | 2052-317 | 2 | WLMT SCREEN INTAKE LARGE |
| 2 | 2051-920 | 1 | WLMT PLATE SIDE BED RH GREEN CAMO |
| 3 | 2051-919 | 1 | WLMT PLATE SIDE BED LH GREEN CAMO |
| 4 | 2052-316 | 1 | WLMT SCREEN INTAKE SMALL |
| 5 | 2051-557 | 14 | SCREW #8 SELF TAPPING |
| 6 | 2051-809 | 1 | ASSY SHROUD FRONT CAMO |
| 7 | 2051-474 | 1 | TRIM H-CHANNEL |
| 8 | 2051-690 | 1 | GROMMET BLIND |
| 9 | 8041-801 | 14 | NUT,HEX,NYLOCK, 6-32 |
| 10 | 0302-965 | 14 | WASHER,RIVET,#7 |
| 11 | 2052-423 | 1 | DECAL ST-50 3 1/2" TALL |
| 12 | 2052-424 | 1 | DECAL ST-50 SWOOSH FRONT LOWER LFT |
| 13 | 2052-425 | 1 | DECAL ST-50 SWOOSH FRONT LOWER RFT |
| 14 | 2052-421 | 1 | DECAL ASV 14" LONG |
| 15 | 8040-606 | 4 | NUT,HEX,NYLOCK,1/2-13 UNC,ZN |
| 16 | 2051-914 | 2 | ARMRESTS |
| 17 | 2052-288 | 1 | SEAL FRONT SHROUD |
| 18 | 2052-431 | 1 | DECAL ST-50 SWOOSH PASSENGER SIDE |
| 19 | 2052-428 | 1 | DECAL ST-50 SWOOSH DRIVER SIDE |
| 20 | 2052-432 | 1 | DECAL ST-50 SWOOSH PASSENGER SIDE |
| 21 | 2052-429 | 1 | DECAL ST-50 SWOOSH DRIVER SIDE |
| 22 | 2046-090 | 1 | DECAL TOWER RH |
| 23 | 2052-422 | 2 | DECAL ASV 8 1/2" LONG |
| 24 | 2045-467 | 2 | DECAL WARNING TRACKS |
| 25 | 2052-433 | 1 | DECAL ST-50 SWOOSH PASSENGER SIDE |
| 26 | 2052-430 | 1 | DECAL ST-50 SWOOSH DRIVER SIDE |
| 27 | 2010-127 | 2 | SWITCH,SEAT (NEW STYLE) |
| 28 | 8102-402 | 4 | CAPSCREW,HH 1/2-13 UNCx1.0 GD8 |
| 29 | 2051-913 | 2 | SEAT BLACK W/O ARMRESTS |
| 30 | 2045-499 | 1 | ASSY BELT |

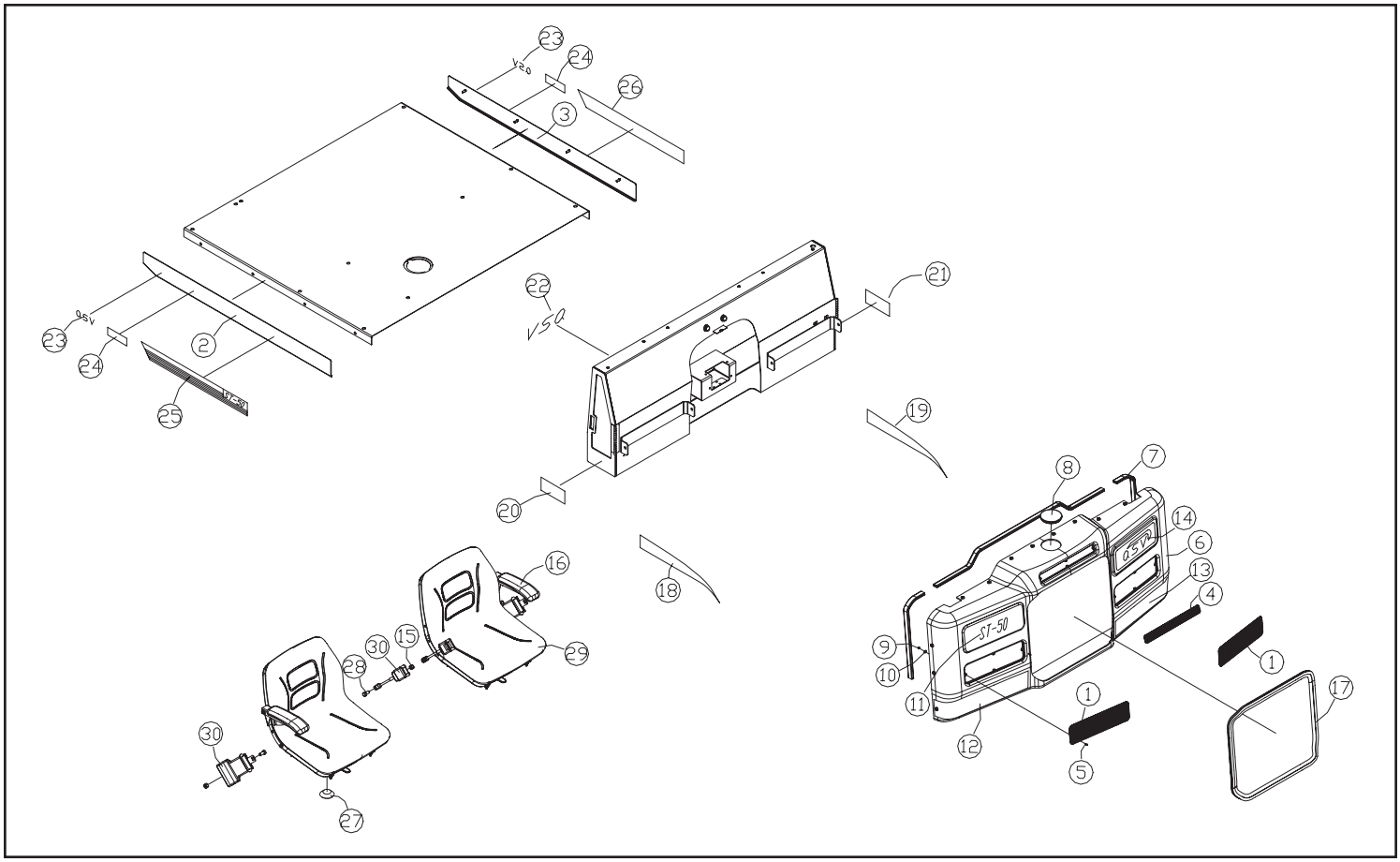

# WHITE CAB FASCIA (OPTIONAL) (Serial #: CFA 00318-Current)

| REF. NO. | PART NUMBER | QTY. | DESCRIPTION |
|---|---|---|---|
| 1 | 2052-317 | 2 | WLMT SCREEN INTAKE LARGE |
| 2 | 2052-315 | 1 | WLMT PLATE SIDE BED RHT WHITE |
| 3 | 2052-314 | 1 | WLMT PLATE SIDE BED LFT WHITE |
| 4 | 2052-316 | 1 | WLMT SCREEN INTAKE SMALL |
| 5 | 2051-557 | 14 | SCREW #8 SELF TAPPING |
| 6 | 2052-310 | 1 | ASSY SHROUD FRONT WHITE |
| 7 | 2051-474 | 1 | TRIM H-CHANNEL |
| 8 | 2051-690 | 1 | GROMMET BLIND |
| 9 | 8041-801 | 14 | NUT,HEX,NYLOCK, 6-32 |
| 10 | 0302-965 | 14 | WASHER,RIVET,#7 |
| 11 | 2052-423 | 1 | DECAL ST-50 3 1/2" TALL |
| 12 | 2052-424 | 1 | DECAL ST-50 SWOOSH FRONT LOWER LFT |
| 13 | 2052-425 | 1 | DECAL ST-50 SWOOSH FRONT LOWER RFT |
| 14 | 2052-421 | 1 | DECAL ASV 14" LONG |
| 15 | 8040-606 | 4 | NUT,HEX,NYLOCK,1/2-13 UNC,ZN |
| 16 | 2051-914 | 2 | ARMRESTS |
| 17 | 2052-288 | 1 | SEAL FRONT SHROUD |
| 18 | 2052-431 | 1 | DECAL ST-50 SWOOSH PASSENGER SIDE |
| 19 | 2052-428 | 1 | DECAL ST-50 SWOOSH DRIVER SIDE |
| 20 | 2052-432 | 1 | DECAL ST-50 SWOOSH PASSENGER SIDE |
| 21 | 2052-429 | 1 | DECAL ST-50 SWOOSH DRIVER SIDE |
| 22 | 2046-090 | 1 | DECAL TOWER RH |
| 23 | 2052-422 | 2 | DECAL ASV 8 1/2" LONG |
| 24 | 2045-467 | 2 | DECAL WARNING TRACKS |
| 25 | 2052-433 | 1 | DECAL ST-50 SWOOSH PASSENGER SIDE |
| 26 | 2052-430 | 1 | DECAL ST-50 SWOOSH DRIVER SIDE |
| 27 | 2010-127 | 2 | SWITCH,SEAT (NEW STYLE) |
| 28 | 8102-402 | 4 | CAPSCREW,HH 1/2-13 UNCx1.0 GD8 |
| 29 | 2051-913 | 2 | SEAT BLACK W/O ARMRESTS |
| 30 | 2045-499 | 1 | ASSY BELT |

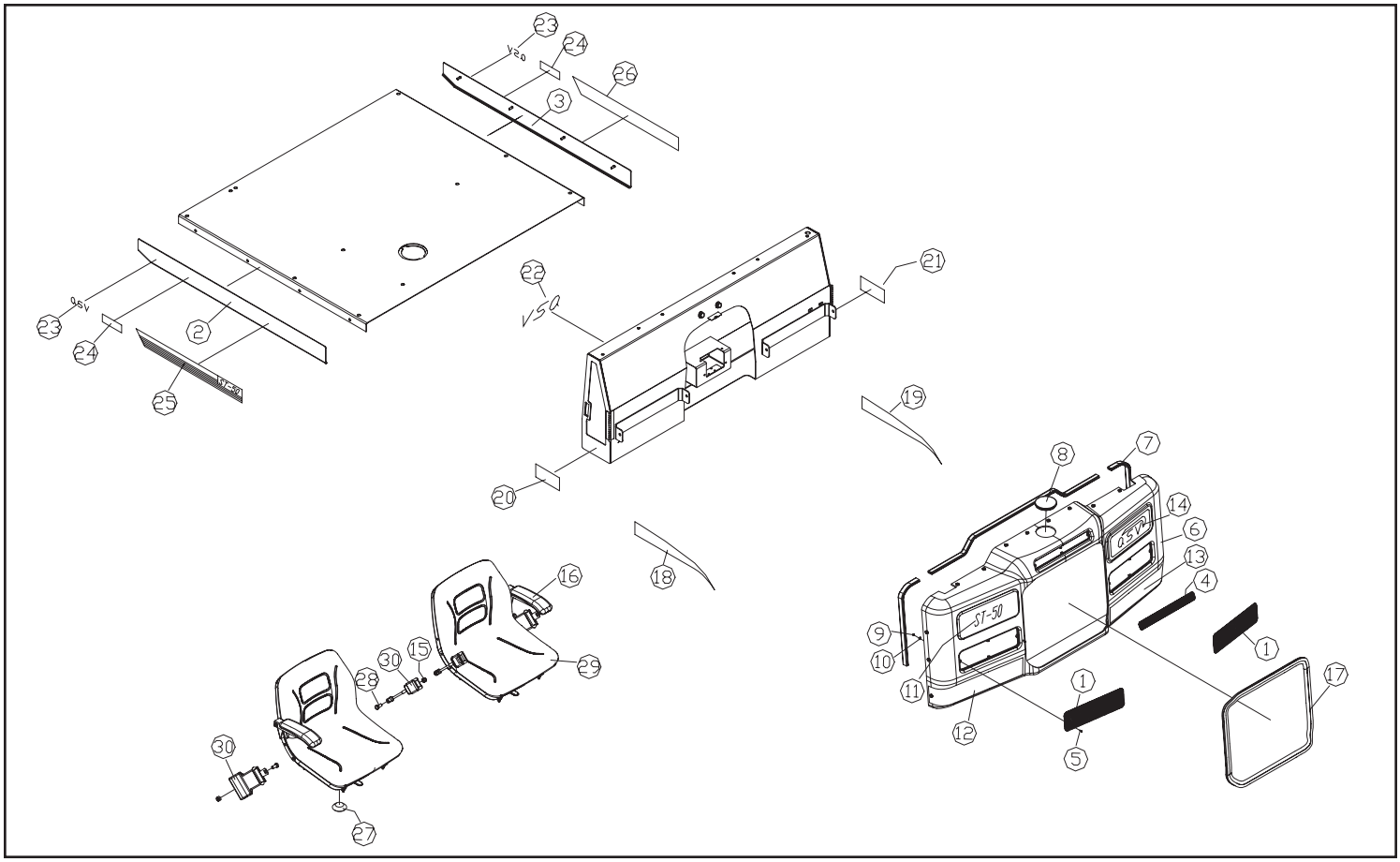

# CAB INTERIOR (Serial #: CFA 00318-Current)

| REF. NO. | PART NUMBER | QTY. | DESCRIPTION |
|---|---|---|---|
| 1 | 0304-551 | 1 | RING,KEY |
| 2 | 2045-792 | 1 | COVER KEY IGNITION |
| 3 | 2045-432 | 1 | KEY IGNITION |
| 4 | 2052-014 | 1 | DECAL WARNING, INCLINES |
| 5 | 2046-005 | 1 | DECAL HEATER SR NO LAP BAR |
| 6 | 2051-911 | 1 | PLUG FINISHING .4375 |
| 7 | 2075-222 | 2 | PLUG HEATER VENT |
| 8 | 2051-957 | 1 | ARM LATCH CUPHOLDER |
| 9 | 0310-475 | 2 | SCREW,10-32x.5,TRUSSHEAD |
| 10 | 2051-808 | 1 | LATCH CUPHOLDER |
| 11 | 2051-167 | 1 | CONSOLE FRONT |
| 12 | 2051-555 | 36 | WASHER FLANGED FHCS 1/4-20 x .75 |
| 13 | 2051-556 | 36 | CAPSCREW FHCS 1/4-20 x 1.0 |
| 14 | 0302-042 | 2 | LATCH,RUBBER,T-HANDLE |
| 15 | 0310-136 | 4 | FRAME,END |
| 16 | 0310-137 | 3 | FRAME,MID |
| 17 | 2030-244 | 1 | GAUGE WARNING INDICATION |
| 18 | 0310-128 | 1 | SWITCH,HEATER |
| 19 | 0310-133 | 1 | SWITCH,BEACON |
| 20 | 2051-977 | 1 | SWITCH LIGHTS |
| 21 | 2051-692 | 1 | SWITCH OPERATE TO PUSH |
| 22 | 2051-691 | 1 | SWITCH SPEED TWO |
| 23 | 0200-252 | 1 | SWITCH,3 POSITION,LOCKING |
| 24 | 2030-243 | 1 | GAUGE FUEL |
| 25 | 2045-502 | 1 | METER HOUR |
| 26 | 0304-028 | 1 | SWITCH,IGNITION,RC |
| 27 | 2051-168 | 1 | SHROUD ENGINE |
| 28 | 2051-654 | 1 | SCREW HEAD WING |
| 29 | 2051-447 | 2 | SEAT |
| 30 | 2045-499 | 1 | ASSY BELT |
| 31 | 8040-606 | 4 | NUT,HEX,NYLOCK,1/2-13 UNC,ZN |
| 32 | 8102-402 | 4 | CAPSCREW,HH 1/2-13 UNCx1.0 GD8 |
| 33 | 2051-804 | 1 | CUPHOLDER NON-HEATER |
| 34 | 8040-276 | 2 | NUT,HEX,NYLOCK,10-32 UNF,ZN |
| 35 | 2051-807 | 1 | CATCH CUPHOLDER |
| 36 | 2051-679 | 1 | DECAL WARNING PASSENGER |
| 37 | 2051-683 | 1 | DECAL CONTROL JOYSTICK FUNCTIONS |
| 38 | 2051-689 | 1 | DECAL THROTTLE |
| 39 | 2010-127 | 2 | SWITCH,SEAT (NEW STYLE) |
| 40 | 2051-681 | 1 | DECAL SURROUND LT SWITCH POD |
| 41 | 2052-416 | 1 | DECAL SURROUNG RIGHT SWITCH POD |
| 42 | 2051-688 | 1 | DECAL SURROUND IGNITION SWITCH |
| 43 | 2051-678 | 1 | DECAL WARNING GENERAL |
| 44 | 2052-434 | 1 | SWITCH ST-50 FNT/RR HYDRAULIC CIRCUIT |

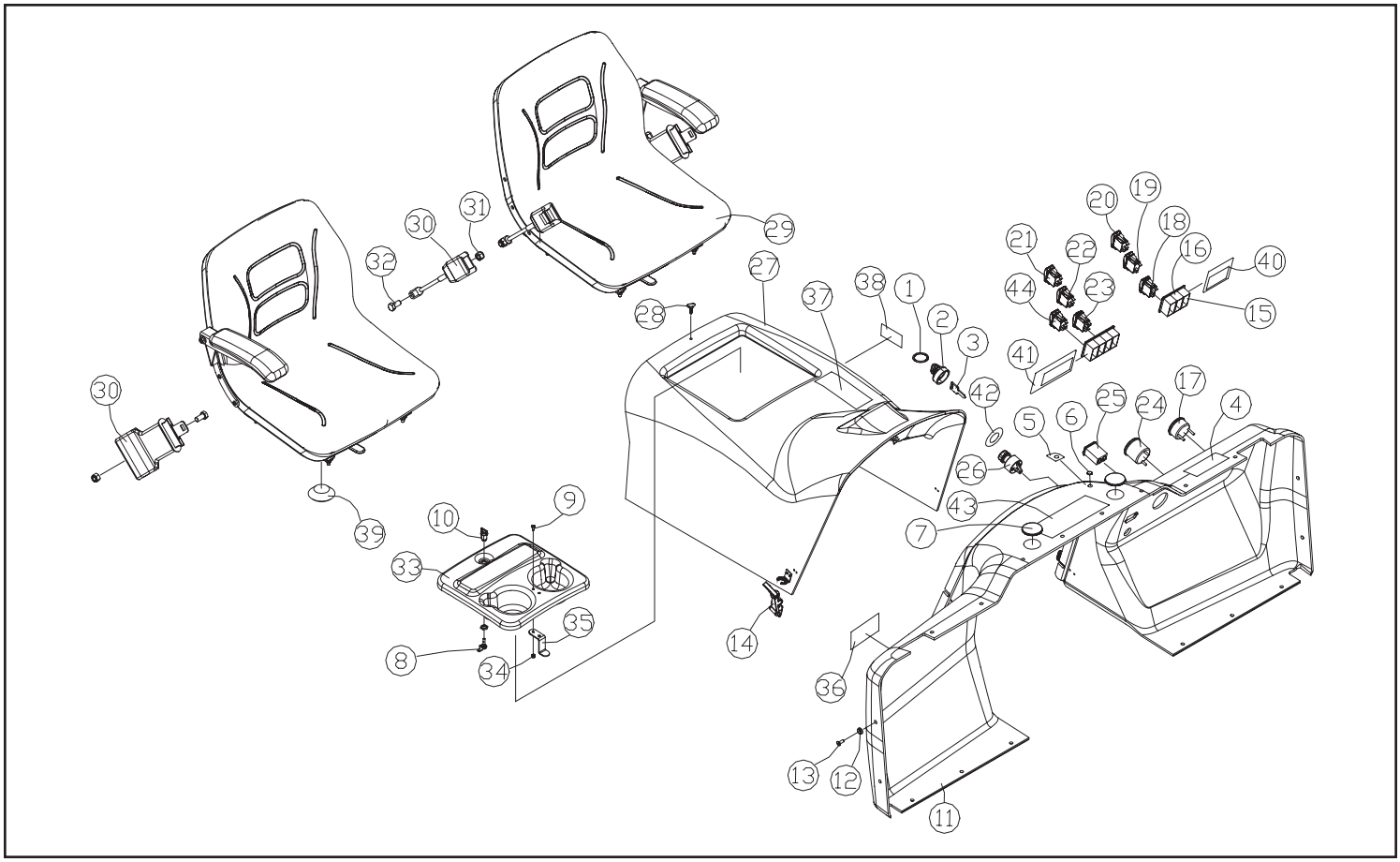

# CHASSIS/R.O.P.S. ASSEMBLY (Serial #: CFA 00318-Current)

| REF. NO. | PART NUMBER | QTY. | DESCRIPTION |
|---|---|---|---|
| 1 | 2051-379 | 1 | WLMT TANK FUEL |
| 2 | 0304-600 | 1 | ASSY,UNIT,SENDING,FUEL |
| 3 | 8102-222 | 44 | CAPSCREW,HH,3/8-16 UNCx1.0,GD8 |
| 4 | 8051-272 | 52 | WASHER,SPRING LOCK,3/8,ZN |
| 5 | 0300-732 | 2 | CLAMP,HOSE,#4 |
| 6 | 2051-388 | 1 | HOSE VENT FUEL |
| 7 | 2051-387 | 1 | HOSE FILLER GAS |
| 8 | 0300-686 | 2 | CLAMP,HOSE,2.0,#32 |
| 9 | 2045-407 | 1 | CAP FUEL GREEN W/ASV LOGO |
| 10 | 2051-644 | 4 | LATCH SEAT |
| 11 | 2051-289 | 1 | WLMT CONSOLE REAR MAIN |
| 12 | 8005-517 | 4 | CAPSCREW,SOC HD,1/4-20 UNCx.50 |
| 13 | 2051-319 | 1 | COVER HOUSING QC REAR |
| 14 | 2051-906 | 2 | PIN U 98416A011 |
| 15 | 2051-845 | 1 | WLMT ROPS |
| 16 | 8102-130 | 4 | CAPSCREW,HH 5/16-18x3/4,GR8 |
| 17 | 8051-242 | 18 | WASHER,SPRING LOCK,5/16,ZN |
| 18 | 8102-229 | 4 | CAPSCREW,HH 3/8-16UNCx2.5,GD8 |
| 19 | 8040-426 | 17 | NUT,HEX,NYLOCK,5/16-18 UNC,ZN |
| 20 | 2051-980 | 1 | LIGHT,REAR |
| 21 | 2051-646 | 1 | WLMT SEAT PLATE RH |
| 22 | 2051-553 | 1 | HANDLE THROTTLE 62385K67 |
| 23 | 2051-550 | 1 | WLMT LEVER THROTTLE |
| 24 | 8102-230 | 1 | CAPSCREW,HH 3/8-16UNCx2.75 GD8 |
| 25 | 8050-277 | 1 | WASHER,WROUGHT,3/8,SAE,ZN |
| 26 | 2045-662 | 1 | SPRING 2.0" x 1/2" ID 1140 LBF |
| 27 | 2051-545 | 1 | WLMT BASE THROTTLE |
| 28 | 0300-980 | 1 | WASHER,1.447 x .406 x .125 |
| 29 | 2045-678 | 1 | WASHER LEATHER |
| 30 | 8040-486 | 1 | NUT,HEX,NYLOCK,3/8-16 UNC,ZN |
| 31 | 2051-240 | 1 | WLMT CHASSIS |
| 32 | 2051-583 | 1 | COVER PEDAL FOOT HYD |
| 33 | 2051-322 | 1 | WLMT BUMPER FRONT |
| 34 | 8050-282 | 30 | WASHER,WROUGHT,3/8,STD,ZN |
| 35 | 2051-541 | 1 | WLMT COVER HITCH FRONT |
| 36 | 2051-826 | 1 | PIN HITCH 5/8 x 4.00" W/ CLIP |
| 37 | 2051-441 | 1 | WLMT SEAT PLATE LH |
| 38 | 2051-927 | 2 | SEAL, SEAT |
| 39 | 0308-193 | 2 | BOLT,BUTTONHEAD,1/4 x 20 x 1.0 |
| 40 | 8050-222 | 18 | WASHER,WROUGHT,1/4,STD,ZN |
| 41 | 2051-751 | 1 | PANEL ACCESS |
| 42 | 2051-752 | 1 | WLMT CLAMP COVER ACCESS BED |
| 43 | 2051-340 | 1 | FLATBED MAIN |
| 44 | 2051-452 | 1 | PLATE SKID 1 |
| 45 | 2051-454 | 1 | PLATE SKID 2 |
| 46 | 2051-456 | 1 | PLATE SKID 3 |
| 47 | 2051-458 | 1 | PLATE SKID 4 |
| 48 | 2051-896 | 1 | WLMT RAIL RH |
| 49 | 2051-901 | 1 | WLMT RAIL CENTER |
| 50 | 2051-895 | 1 | WLMT RAIL LH |
| 51 | 2045-756 | 2 | LIGHT 35W W/BEZEL |
| 52 | 2051-860 | 1 | WLMT PLATE QC COVER |
| 53 | 2051-862 | 2 | KNOB PANEL ACCESS |
| 54 | 8102-224 | 6 | CAPSCREW,HH,3/8-16UNCx1.25,GD8 |
| 55 | 2045-733 | 2 | ASSY LIGHT SINGLE |
| 56 | 0304-475 | 1 | BULB,HEADLIGHT |
| 57 | 2045-414 | 2 | OUTLET,POWER |
| 58 | 2051-699 | 1 | DECAL WARNING NO RIDERS |
| 59 | 2046-090 | 1 | DECAL TOWER RH |
| 60 | 2051-684 | 2 | DECAL WARNING ROPS |
| 61 | 2051-700 | 1 | DECAL CAUTION LOAD MANAGEMENT |
| 62 | 2051-686 | 2 | DECAL WARNING CLOSE SEAT LATCH |
| 63 | 2051-687 | 1 | DECAL HYD OIL FILL / CHECK |
| 64 | 2051-685 | 1 | DECAL DIESEL FUEL ONLY |
| 65 | 2051-308 | 1 | WLMT DOOR CONSOLE LEFT |
| 66 | 2051-341 | 1 | WLMT DOOR CONSOLE RH |
| 67 | 2052-458 | 1 | WLMT HINGE LH |
| 68 | 2052-460 | 1 | WLMT HINGE RH |
| 69 | 8102-042 | 12 | CAPSCREW, HH 1/4-20UNC 1" GD8 |
| 70 | 8051-212 | 8 | WASHER,SPRING LOCK,1/4,ZN |
| 71 | 8040-366 | 4 | NUT,HEX,NYLOCK,1/4-20 UNC,ZN |

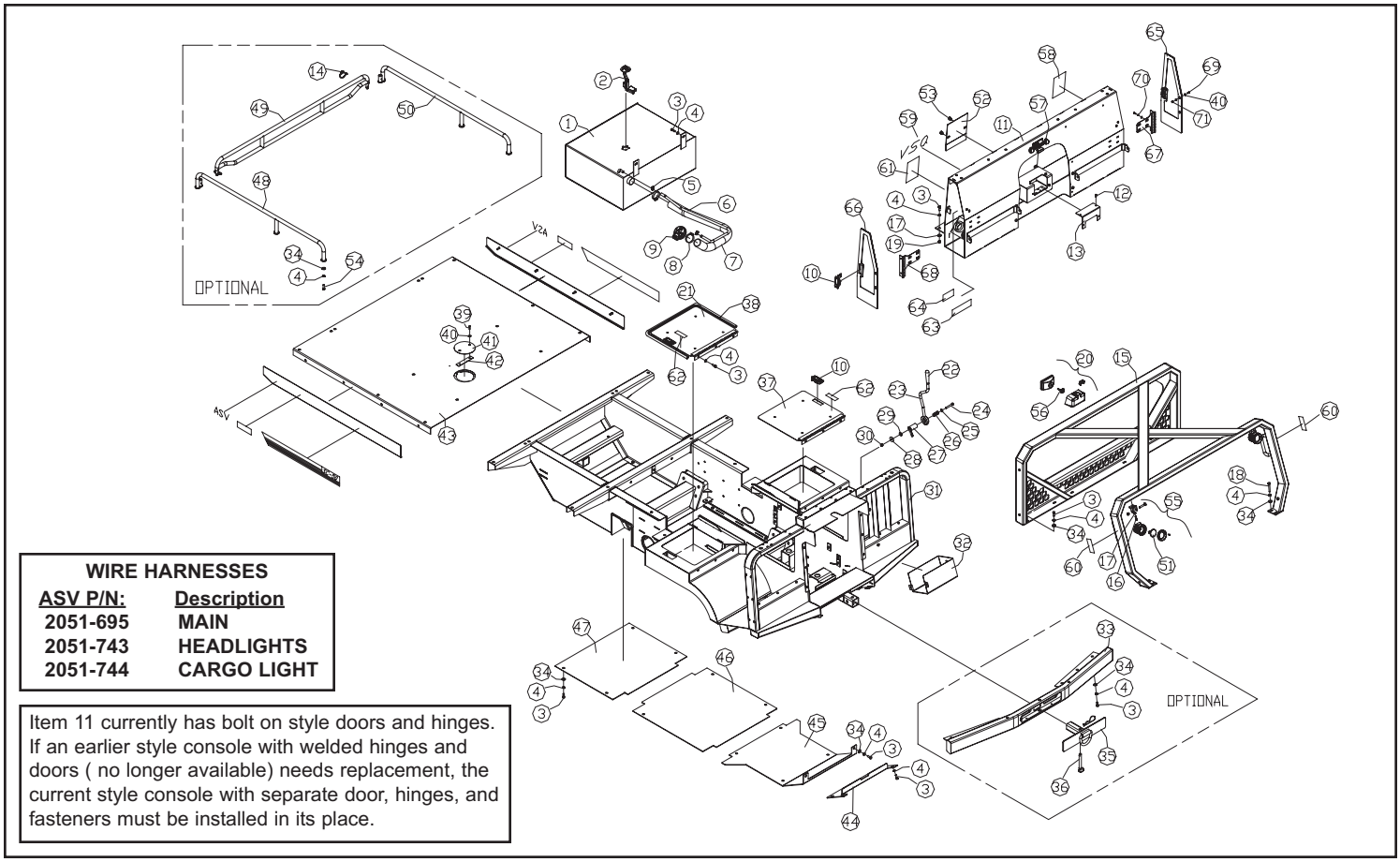


**WIRE HARNESSES**

| ASV P/N: | Description |
|---|---|
| 2051-695 | MAIN |
| 2051-743 | HEADLIGHTS |
| 2051-744 | CARGO LIGHT |

Item 11 currently has bolt on style doors and hinges. If an earlier style console with welded hinges and doors ( no longer available) needs replacement, the current style console with separate door, hinges, and fasteners must be installed in its place.

# RADIATOR/OIL COOLER ASSEMBLY (Serial #: CFA 00318-Current)

| REF. NO. | PART NUMBER | QTY. | DESCRIPTION |
|---|---|---|---|
| 1 | 2052-286 | 1 | WLMT SCREEN GRILL |
| 2 | 8051-272 | 6 | WASHER,SPRING LOCK,3/8,ZN |
| 3 | 2051-183 | 1 | RADIATOR |
| 4 | 8050-262 | 4 | WASHER,WROUGHT,5/16,STD,ZN |
| 5 | 2052-282 | 1 | WLMT BAFFLE COOLER |
| 6 | 0304-458 | 1 | CAP,RADIATOR,16# |
| 7 | 0304-035 | 1 | HOSE RADIATOR UPPER |
| 8 | 0300-687 | 4 | CLAMP,HOSE,1.5,#24 |
| 9 | 2051-419 | 1 | RING BRUSH |
| 10 | 0310-323 | 2 | ADAPTER,16MFFOR-12MB |
| 11 | 0304-036 | 1 | HOSE RADIATOR LOWER |
| 12 | 2051-418 | 1 | SHROUD COOLER |
| 13 | 2051-779 | 1 | FAN PUSHER 16.00" BLADE 40* |
| 14 | 0090-129 | 1 | GUARD FAN LH |
| 15 | 2052-017 | 1 | GUARD FAN |
| 16 | 8102-134 | 4 | CAPSCREW,HH,5/16-18UNCx1.25GD8 |
| 17 | 8051-242 | 1 | WASHER,SPRING LOCK,5/16,ZN |
| 18 | 8102-222 | 6 | CAPSCREW,HH,3/8-16 UNCx1.0,GD8 |
| 19 | 8050-282 | 6 | WASHER,WROUGHT,3/8,STD,ZN |

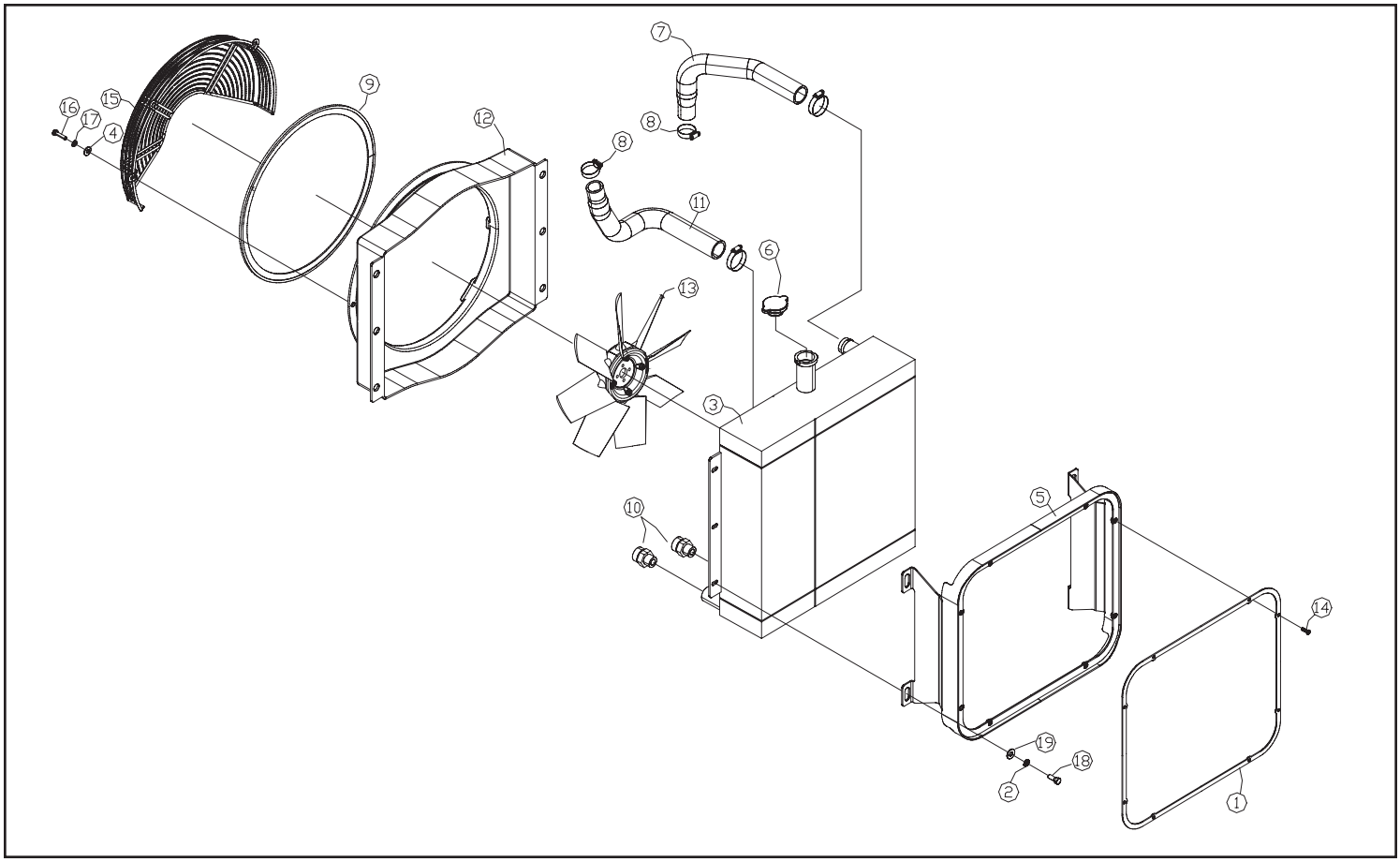

# HYDRAULIC RESERVOIR ASSEMBLY (Serial #: CFA 00318-Current)

| REF. NO. | PART NUMBER | QTY. | DESCRIPTION |
|---|---|---|---|
| 1 | 2051-109 | 1 | TUBE INTAKE |
| 2 | 0300-687 | 4 | CLAMP,HOSE,1.5,#24 |
| 3 | 2051-517 | 1 | HOSE INTAKE PUMP AUX |
| 4 | 2051-628 | 1 | MANIFOLD DRAIN CASE |
| 5 | 2051-516 | 1 | HOSE DRAIN CASE MAIN |
| 6 | 0304-384 | 1 | CLAMP,HOSE # 16 |
| 7 | 2051-406 | 1 | TUBE PRESSURE COOLER CONNECTION |
| 8 | 2051-404 | 1 | TUBE PRESSURE COOLER |
| 9 | 2051-402 | 1 | TUBE RETURN COOLER |
| 10 | 8102-137 | 2 | CAPSCREW,HH,5/16-18UNCx2.0 GD8 |
| 11 | 0201-227 | 2 | CLAMP,COVER,TCP-T4 |
| 12 | 0201-226 | 2 | CLAMP,SET,T4100-PP |
| 13 | 2051-408 | 1 | HOSE FILLER OIL RESERVOIR |
| 14 | 0304-832 | 1 | CAP,SLOSH PROOF,0 PSI |
| 15 | 8102-037 | 4 | CAPSCREW,HH,1/4-20 UNCx.50,GD8 |
| 16 | 8051-212 | 2 | WASHER,SPRING LOCK,1/4,ZN |
| 17 | 2051-410 | 1 | TUBE DIPSTICK OIL RESERVOIR |
| 18 | 8104-132 | 4 | CAPSCREW,HH 5/16-24UNFx 1 GD 8 |
| 19 | 8051-242 | 4 | WASHER,SPRING LOCK,5/16,ZN |
| 20 | 0304-188 | 2 | PLUG,6 ORING,HH |
| 21 | 0307-879 | 1 | SWITCH,TEMP,OIL,225^ |
| 22 | 0310-345 | 2 | ADAPTER,8MFFOR--8MB |
| 23 | 0201-153 | 1 | RELIEF,TANK,O-RING,80-100 PSI |
| 24 | 0310-329 | 2 | ADAPTER,6MFFOR-6MB |
| 25 | 2051-390 | 1 | WLMT RESERVOIR HYD |
| 26 | 8051-272 | 4 | WASHER,SPRING LOCK,3/8,ZN |
| 27 | 8102-222 | 4 | CAPSCREW,HH,3/8-16 UNCx1.0,GD8 |
| 28 | 0310-312 | 1 | ADAPTER,16MFFOR-16MB |
| 29 | 0300-190 | 1 | SCREEN,SUCTION |
| 30 | 0304-452 | 1 | ASSY,COVER,ACCESS |
| 31 | 0200-325 | 2 | O-RING,FILTER CAP |
| 32 | 0200-204 | 1 | ELEMENT,FILTER,MP |
| 33 | 0200-221 | 1 | GASKET,COVER,ACCESS |
| 34 | 0200-203 | 1 | ASSY,FILTER,HYD,4-BOLT |
| 35 | 0300-732 | 2 | CLAMP,HOSE,#4 |
| 36 | 2051-996 | 1 | HOSE VENT HYD |

**Note:** Item 25 (2051-390) is the reservoir weldment only. The suction screen (item 29) is not included or pre-installed. The suction screen must be installed prior to use.

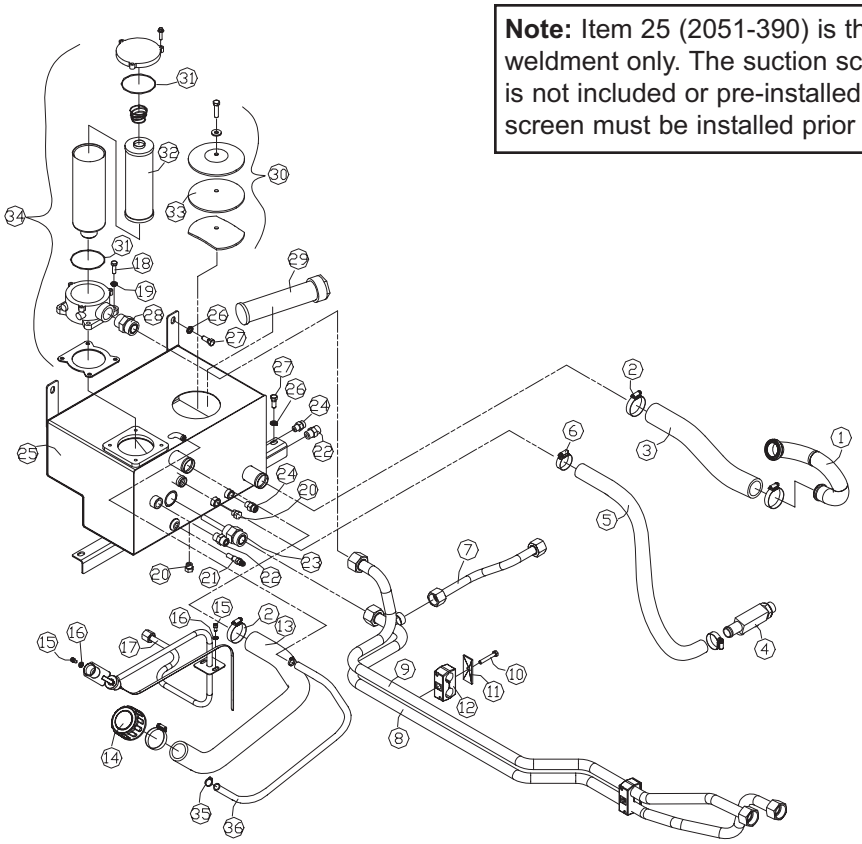

# HYDRAULIC CONTROL ASSEMBLY (Serial #: CFA 00318-Current)

| REF. NO. | PART NUMBER | QTY. | DESCRIPTION |
|---|---|---|---|
| 1 | 2051-529 | 1 | MANIFOLD 2-SPEED BRAKE |
| 2 | 0314-014 | 8 | ADAPTER,6MFFOR-4MB |
| 3 | 2051-469 | 1 | CAM STOP STEERING HYD |
| 4 | 2051-760 | 1 | TUBE TANK STEERING REAR |
| 5 | 2051-620 | 1 | HOSE TWO SPEED BRAKE |
| 6 | 0304-327 | 1 | ADAPTER,TEE 6MJ-6MJ-6MB |
| 7 | 8050-222 | 4 | WASHER,WROUGHT,1/4,STD,ZN |
| 8 | 2051-615 | 1 | BLOCK CONTROL |
| 9 | 8051-212 | 2 | WASHER,SPRING LOCK,1/4,ZN |
| 10 | 8102-045 | 2 | CAPSCREW,HH,1/4-20x1.5"ZN GD8 |
| 11 | 0310-328 | 3 | ADAPTER,6MFFOR-6MB-90 |
| 12 | 0310-329 | 10 | ADAPTER,6MFFOR-6MB |
| 13 | 8102-134 | 2 | CAPSCREW,HH,5/16-18UNCx1.25GD8 |
| 14 | 0310-584 | 2 | PLATE,COVER TCP-T2 |
| 15 | 0201-225 | 2 | CLAMP,SET,T2038-PP |
| 16 | 2051-776 | 1 | TUBE PRESSURE STEERING HUSCO |
| 17 | 2051-777 | 1 | TUBE TANK STEERING FRONT HUSCO |
| 18 | 8040-366 | 2 | NUT,HEX,NYLOCK,1/4-20 UNC,ZN |
| 19 | 0304-404 | 2 | WASHER,FLAT,1.125 OD x .5 ID x 1/4,ZN |
| 20 | 8005-527 | 2 | CAPSCREW,SOC HD,1/4-20 UNCx2.0 |
| 21 | 2051-768 | 1 | CONTROLLER STEERING HUSCO |
| 22 | 2051-822 | 1 | CAP CENTER WHEEL STEERING |
| 74 | 8005-527 | 2 | CAPSCREW,SOC HD,1/4-20 UNCx2.0 |
| 23 | 8041-785 | 1 | NUT,HEX,NYLOCK,3/4-16UNF,THIN, |
| 24 | 8050-440 | 1 | WASHER,WROUGHT,3/4,SAE,ZN |
| 25 | 2051-472 | 1 | WHEEL STEERING |
| 26 | 0090-082 | 1 | WASHER FENDER 1.75 x 17/32 x 1/8 |
| 27 | 2051-616 | 1 | KEY WOODRUFF STEERING |
| 28 | 2051-468 | 1 | SHAFT STEERING |
| 29 | 8102-222 | 6 | CAPSCREW,HH,3/8-16 UNCx1.0,GD8 |
| 30 | 8051-272 | 8 | WASHER,SPRING LOCK,3/8,ZN |
| 31 | 2051-771 | 1 | WLMT BRACKET STEERING HUSCO |
| 32 | 2051-465 | 2 | BUSHING SHOULDER STEERING |
| 33 | 0304-495 | 2 | STUD,BALL,10MM STUD |
| 34 | 2051-473 | 1 | SPRING GAS DAMPNER STEERING |
| 35 | 2051-773 | 2 | SPACER STEERING 1" ID x .8" |
| 36 | 2051-582 | 2 | CAM STEERING HYD 75 DEGREE |
| 37 | 2051-774 | 1 | SPACER STEERING 1" ID x 1.5" |
| 38 | 2051-470 | 1 | MNT SPRING GAS STEERING HYD |
| 39 | 0090-003 | 1 | NUT,WELD,HEX,5/16-18 |

| REF. NO. | PART NUMBER | QTY. | DESCRIPTION |
|---|---|---|---|
| 40 | 8050-247 | 3 | WASHER,WROUGHT,5/16,SAE,ZN |
| 41 | 2015-018 | 1 | WASHER,FENDER,1.75x0.53x0.125 |
| 42 | 8051-332 | 1 | WASHER,SPRING LOCK,1/2,ZN |
| 43 | 2051-656 | 1 | CAPSCREW MODIFIED STEERING |
| 44 | 2051-586 | 1 | PEDAL FOOT |
| 45 | 8051-242 | 4 | WASHER,SPRING LOCK,5/16,ZN |
| 46 | 8102-130 | 4 | CAPSCREW,HH 5/16-18x3/4,GR8 |
| 47 | 2051-833 | 1 | PIN PIVOT FOOT PEDAL |
| 48 | 2051-672 | 1 | WLMT PEDAL FOOT |
| 49 | 0090-098 | 1 | SCREW SET SOCKET M6 x 1.0 x 20.0 |
| 50 | 0312-051 | 2 | NUT,HEX,M8 x 1.25 |
| 51 | 0090-099 | 2 | SCREW HH M8 x 1.25 x 22.0 SLOTTED |
| 52 | 2051-599 | 1 | TUBE TANK PEDAL |
| 53 | 2051-600 | 1 | TUBE PRESSURE PEDAL |
| 54 | 2051-602 | 1 | TUBE REVERSE STEERING |
| 55 | 2051-601 | 1 | TUBE FORWARD STEERING |
| 56 | 0304-441 | 2 | SWITCH,PRESSURE |
| 57 | 2051-762 | 2 | ADAPTOR,6MFFOR-6MB W/.062 ORIFICE |
| 58 | 2051-584 | 1 | BLOCK SHUTTLE CONTROL PILOT |
| 59 | 2051-625 | 1 | HOSE REV LEFT |
| 60 | 2051-626 | 1 | HOSE REV RIGHT |
| 61 | 0201-488 | 1 | HOSE,8M4K-8FFORX-8FFORX-23.5" |
| 62 | 2051-810 | 1 | ADAPTER 8MFOR-10MB |
| 63 | 0310-385 | 1 | TUBE,HYD,RETURN,FILTER,LF |
| 64 | 0200-119 | 1 | PUMP,HYD,AUX |
| 65 | 2030-046 | 1 | HOSE,6G1,6FFORX90S,6FFORX90L,2 |
| 66 | 2051-624 | 1 | HOSE FOWARD RIGHT |
| 67 | 2051-623 | 1 | HOSE FORWARD LEFT |
| 68 | 0200-093 | 1 | PUMP,TANDEM,TRANSMISSION |
| 69 | 2051-784 | 1 | TUBE RIGHT STEERING HUSCO |
| 70 | 2051-783 | 1 | TUBE LEFT STEERING HUSCO |
| 71 | 0304-133 | 2 | CAPSCREW,12PT,1/2-13UNC X 1.5" |
| 72 | 8005-517 | 1 | CAPSCREW,SOC HD,1/4-20 UNCx.50 |

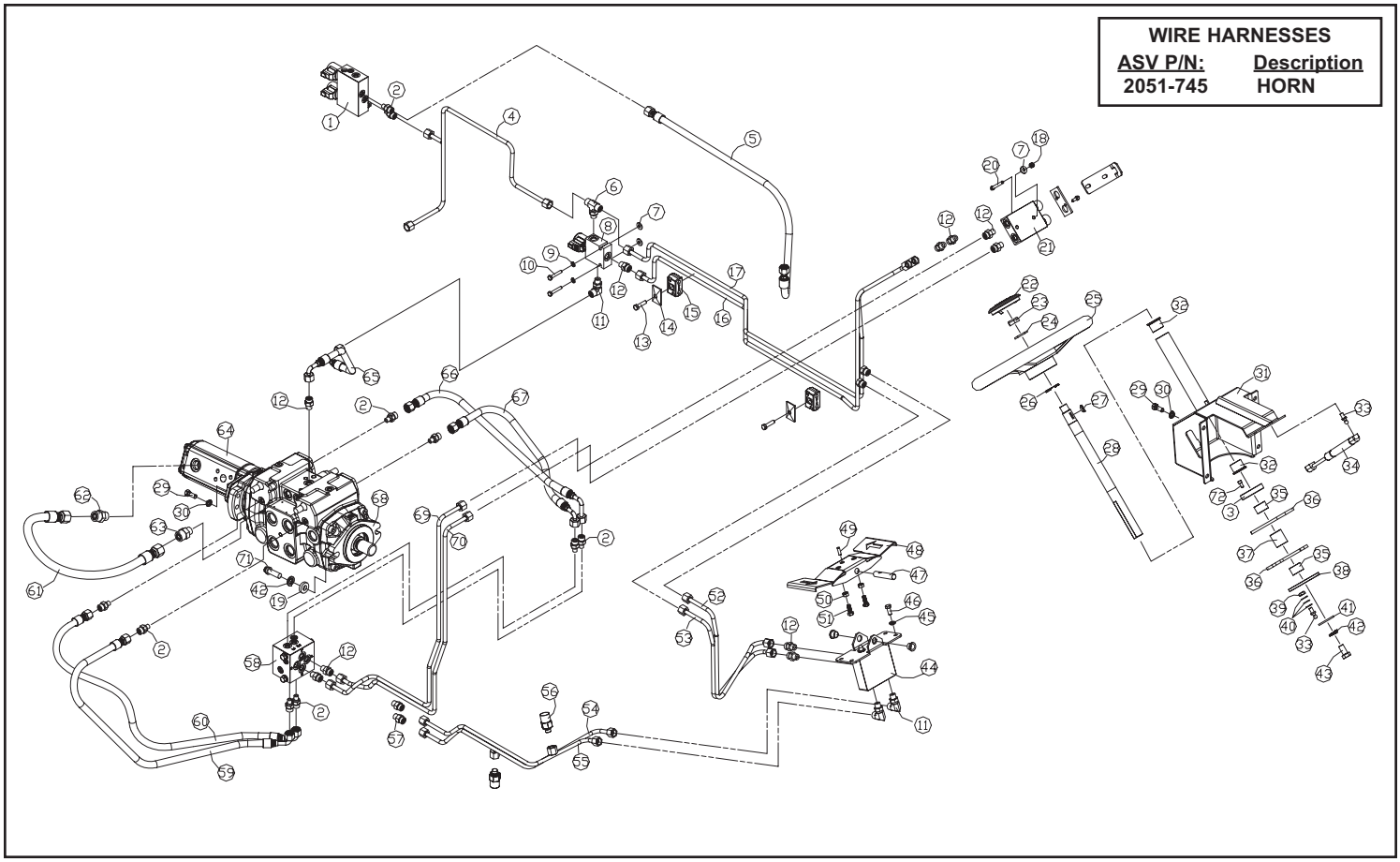

# PILOT GENERATION BLOCK (Serial #: CFA 00318-Current)

| REF. NO. | PART NUMBER | QTY. | DESCRIPTION | REF. NO. | PART NUMBER | QTY. | DESCRIPTION |
|---|---|---|---|---|---|---|---|
| 1 | 2051-615 | 1 | BLOCK, CONTROL | | | | |
| 2 | 2051-840 | 1 | SPOOL SV08-33 | | | | |
| 3 | 0200-364 | 1 | SOLENOID,W/DEUTSCH CONNECTOR | | | | |
| | | | | | | | |
| | | | | | | | |
| | | | | | | | |
| | | | | | | | |
| | | | | | | | |
| | | | | | | | |
| | | | | | | | |
| | | | | | | | |

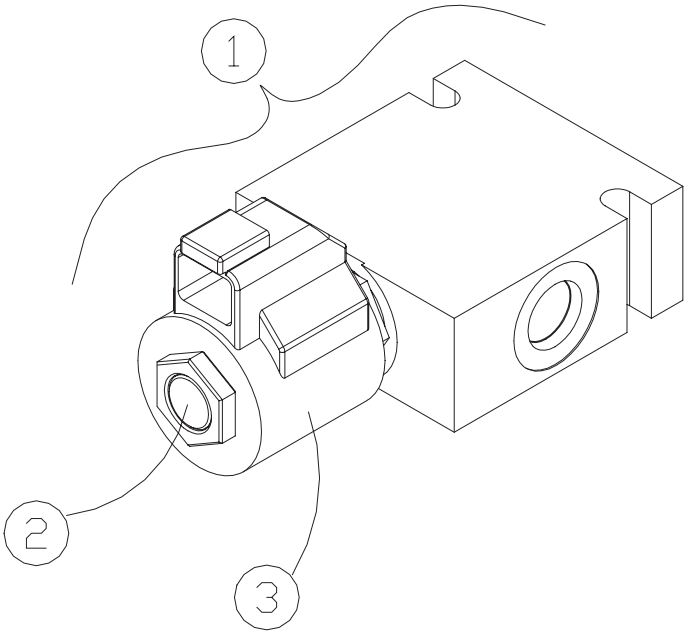

# HYDRAULIC DRIVE ASSEMBLY (Serial #: CFA 00318-Current)

| REF. NO. | PART NUMBER | QTY. | DESCRIPTION |
|---|---|---|---|
| 1 | 2045-998 | 1 | PUMP TANDEM A22-38.5CC |
| 2 | 0200-119 | 1 | PUMP,HYD,AUX |
| 3 | 2051-513 | 1 | HOSE VALVE IMPLEMENT |
| 4 | 0310-468 | 4 | CAPSCREW,HH,M10x1.5x35,ZINC |
| 5 | 8051-272 | 4 | WASHER,SPRING LOCK,3/8,ZN |
| 6 | 0200-172 | 1 | COUPLING,SPLIT,CODE 61,0.75" |
| 7 | 2051-628 | 1 | MANIFOLD DRAIN CASE |
| 8 | 0201-225 | 2 | CLAMP,SET,T2038-PP |
| 9 | 0201-316 | 2 | ADAPTER,FS6801-L-12-12-NW0 |
| 10 | 2051-185 | 1 | HOSE DRIVE TOP RH |
| 11 | 2051-186 | 1 | HOSE DRIVE BOTTOM RH |
| 12 | 2051-187 | 1 | HOSE CASE RH |
| 13 | 2051-181 | 1 | HOSE CASE LH |
| 14 | 2051-179 | 1 | HOSE DRIVE LH TOP |
| 15 | 2051-180 | 1 | HOSE DRIVE LH BOTTOM |
| 16 | 2051-182 | 1 | HOSE BRAKE LH |
| 17 | 2051-184 | 1 | HOSE 2 SPEED LH |
| 18 | 2051-189 | 1 | HOSE 2 SPEED RH |
| 19 | 2051-188 | 1 | HOSE BRAKE RH |
| 20 | 0201-309 | 4 | ADAPTER,FS6400-04-06-0 |
| 21 | 0310-345 | 2 | ADAPTER,8MFFOR--8MB |
| 22 | 0700-171 | 16 | CAPSCREW,HH,M10 x 1.5 x 45 |
| 23 | 0700-170 | 16 | WASHER,21 x 22 x 2.5 |
| 24 | 0700-172 | 8 | FLANGE,HALF,12 |
| 25 | 0201-558 | 1 | O-RING,0.984IDx0.139CS |
| 26 | 2051-165 | 2 | MOTOR DRIVE HYD 2-SPEED |
| 27 | 0314-014 | 5 | ADAPTER,6MFFOR-4MB |
| 28 | 8051-242 | 3 | WASHER,SPRING LOCK,5/16,ZN |
| 29 | 8102-132 | 3 | CAPSCREW,HH,5/16-18UNCx1.0 GD8 |
| 30 | 0307-933 | 1 | ASSY,SUSPENSION,LH,WIDE TRACK |
| 31 | 2051-534 | 1 | TUBE 2 SPEED |
| 32 | 2051-537 | 1 | TUBE BRAKE |
| 33 | 8102-134 | 2 | CAPSCREW,HH,5/16-18UNCx1.25GD8 |
| 34 | 0310-584 | 2 | PLATE,COVER TCP-T2 |

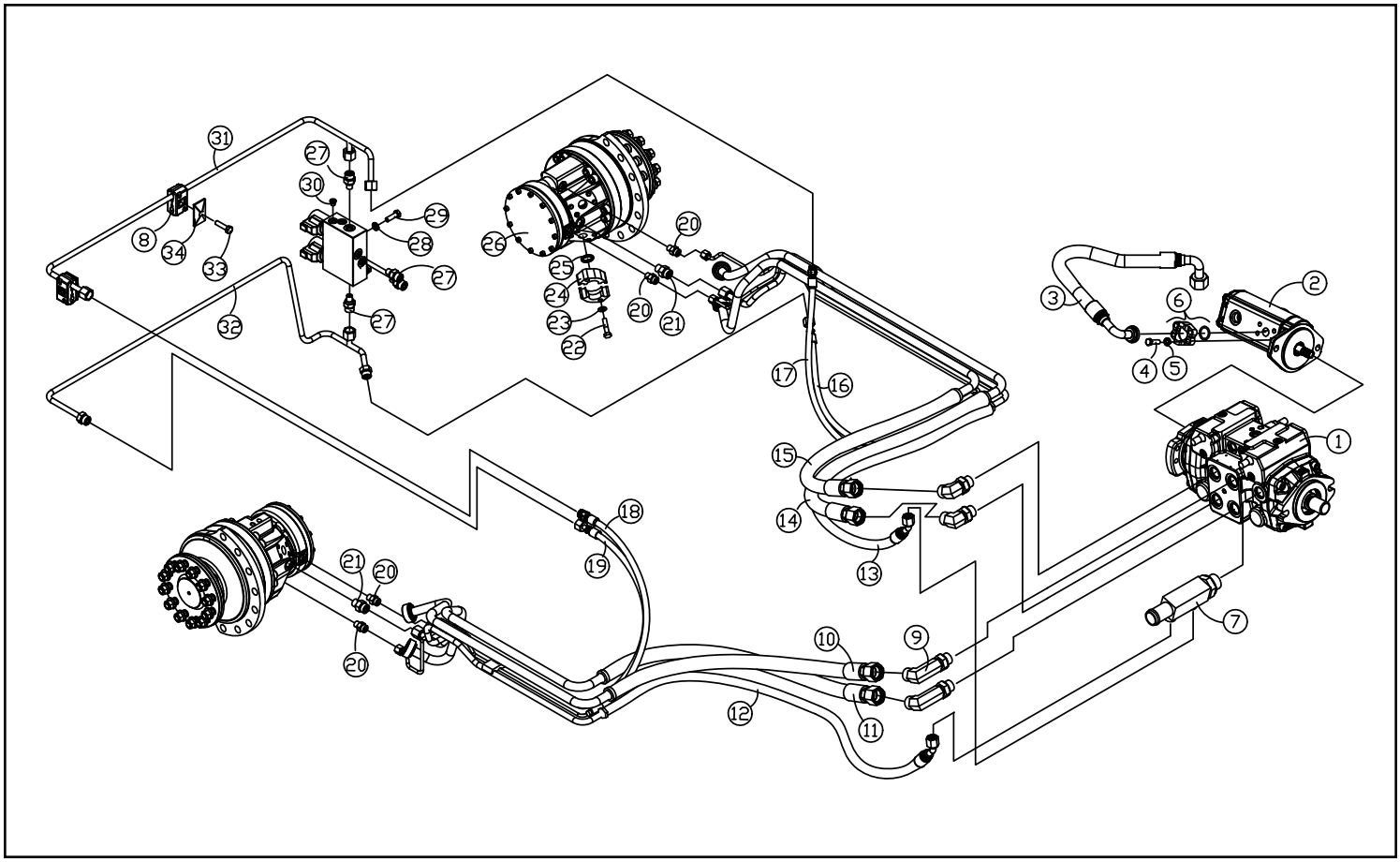

# HYDRAULIC AUXILIARY ASSEMBLY(OPTIONAL) (Serial #: CFA 00318-Current)

| REF. NO. | PART NUMBER | QTY. | DESCRIPTION |
|---|---|---|---|
| 1 | 0310-076 | 3 | COUPLER,QUICK,FF,FEMALE,7/8-14 |
| 2 | 0310-077 | 3 | COUPLER,QUICK,FF,MALE,7/8-14UN |
| 3 | 8102-049 | 12 | CAPSCREW,HH 1/4-20 x 2.50 GD8 |
| 4 | 8051-212 | 12 | WASHER,SPRING LOCK,1/4,ZN |
| 5 | 0201-658 | 10 | ADAPTER,10MFFOR-8MB-S |
| 6 | 0310-329 | 13 | ADAPTER,6MFFOR-6MB |
| 7 | 2045-580 | 2 | CLAMP SET 1038-PP |
| 8 | 2045-581 | 2 | PLATE COVER COP-1 |
| 9 | 8102-044 | 4 | CAPSCREW,HH,1/4-20UNCx1.25,GD8 |
| 10 | 0310-831 | 4 | CLAMP, SET, T2062-PP |
| 11 | 0310-584 | 4 | PLATE,COVER TCP-T2 |
| 12 | 8102-134 | 4 | CAPSCREW,HH,5/16-18UNCx1.25GD8 |
| 13 | 2051-366 | 1 | TUBE B2 |
| 14 | 2051-364 | 1 | TUBE B1 |
| 15 | 2051-362 | 1 | TUBE C1 |
| 16 | 2051-360 | 1 | TUBE C2 |
| 17 | 2051-368 | 1 | TUBE CASE DRAIN FRONT |
| 18 | 2051-375 | 1 | TUBE CASE DRAIN REAR |
| 19 | 2051-373 | 1 | TUBE A2 |
| 20 | 2051-371 | 1 | TUBE A1 |
| 21 | 0304-876 | 3 | MANIFOLD,AUX,HYD |
| 22 | 0304-356 | 3 | PLUG,9/16-18,LOADER RC-30 |
| 23 | 0310-328 | 2 | ADAPTER,6MFFOR-6MB-90 |
| 24 | 2051-524 | 1 | TUBE MIDDLE VALVE IMPLEMENT |
| 25 | 2051-525 | 4 | TUBE SHORT VALVE IMPLEMENT |
| 26 | 8051-272 | 4 | WASHER,SPRING LOCK,3/8,ZN |
| 27 | 8102-222 | 4 | CAPSCREW,HH,3/8-16 UNCx1.0,GD8 |
| 28 | 2051-523 | 1 | TUBE LONG VALVE IMPLEMENT |
| 29 | 0310-591 | 1 | ADAPTER,8MFFOR-6MB-90 |
| 30 | 2051-527 | 1 | TUBE DRAIN VALVE IMPLEMENT |
| 31 | 2051-526 | 1 | TUBE 2 SPEED BRAKE |
| 32 | 0304-327 | 1 | ADAPTER,TEE 6MJ-6MJ-6MB |
| 33 | 0304-020 | 1 | VALVE,LOADER |
| 34 | 2051-370 | 1 | TUBE CASE DRAIN FRONT CONNECTION |
| 35 | 0200-296 | 6 | ADAPTER,O-RING HEX NIPPLE,10-8 |

| REF. NO. | PART NUMBER | QTY. | DESCRIPTION |
|---|---|---|---|
| | | | |

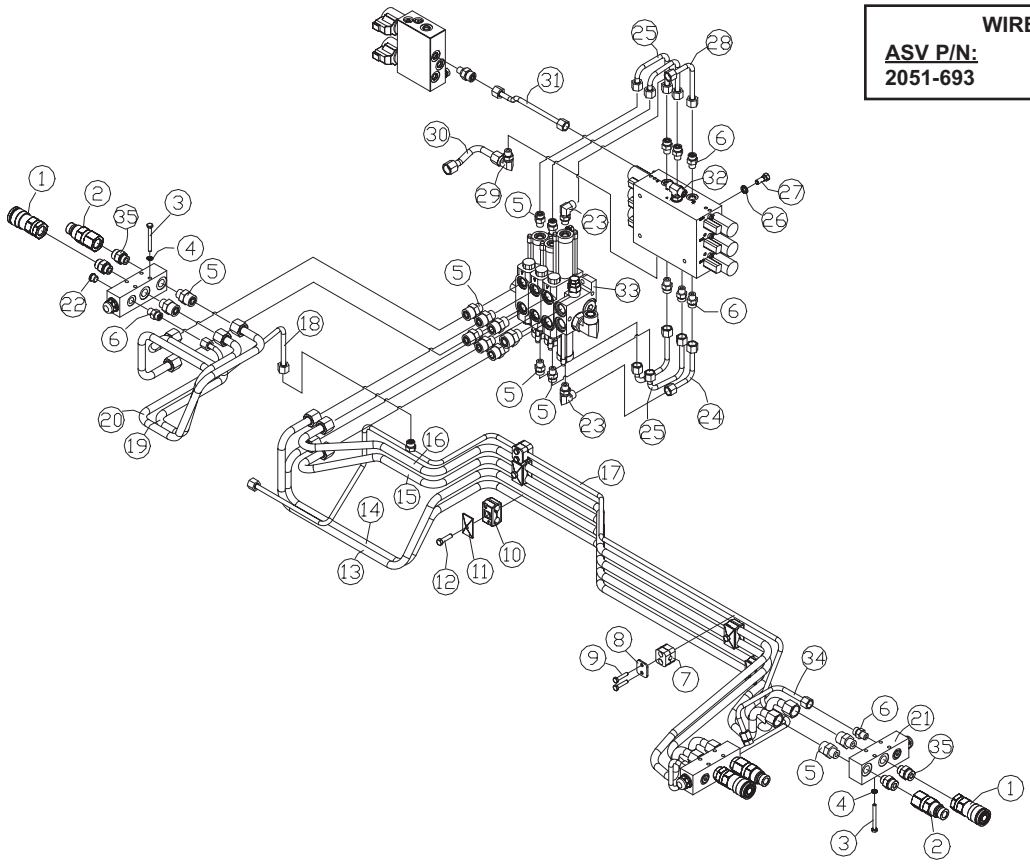

**WIRE HARNESSES**

| ASV P/N: | Description |
|---|---|
| 2051-693 | AUXILIARY HYDRAULIC |

# TWO-SPEED/BRAKE MANIFOLD (Serial #: CFA 00318-Current)

| REF. NO. | PART NUMBER | QTY. | DESCRIPTION | REF. NO. | PART NUMBER | QTY. | DESCRIPTION |
|---|---|---|---|---|---|---|---|
| 1 | 2051-529 | 1 | MANIFOLD 2-SPEED BRAKE | | | | |
| 2 | 2051-531 | 1 | SPOOL,SOLENOID,2POSITION,3WAY-SVO8-31 | | | | |
| 3 | 0200-364 | 2 | SOLENOID,W/DEUTSCH CONNECTOR | | | | |
| 4 | 0307-973 | 4 | PLUG,4MB,SOCKET HEAD | | | | |
| 5 | 2051-840 | 1 | SPOOL SV08-33 | | | | |
| | | | | | | | |
| | | | | | | | |
| | | | | | | | |
| | | | | | | | |
| | | | | | | | |
| | | | | | | | |
| | | | | | | | |

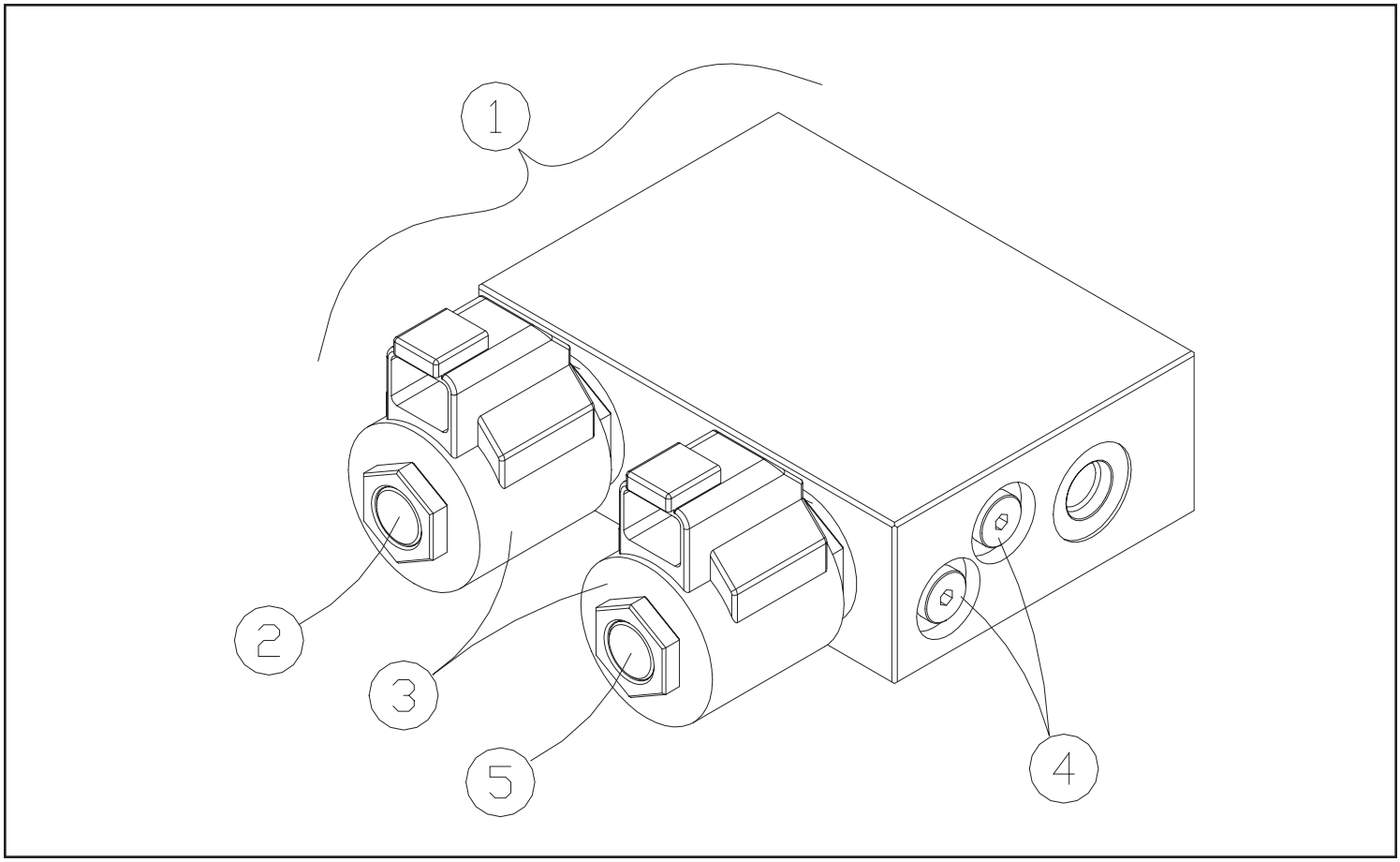

# AUXILIARY MANIFOLD (OPTIONAL) (Serial #: CFA 00318-Current)

| REF. NO. | PART NUMBER | QTY. | DESCRIPTION | REF. NO. | PART NUMBER | QTY. | DESCRIPTION |
|---|---|---|---|---|---|---|---|
| 1 | 2051-520 | 1 | MANIFOLD IMPLEMENT | | | | |
| 2 | 2051-507 | 6 | VALVE,ELCTRO-PROPORTIONAL,EHPR98-T33AA | | | | |
| 3 | 2051-522 | 12 | CAPSCREW,4mm x .7, 8mm LG. | | | | |
| | | | | | | | |
| | | | | | | | |
| | | | | | | | |
| | | | | | | | |
| | | | | | | | |
| | | | | | | | |
| | | | | | | | |
| | | | | | | | |

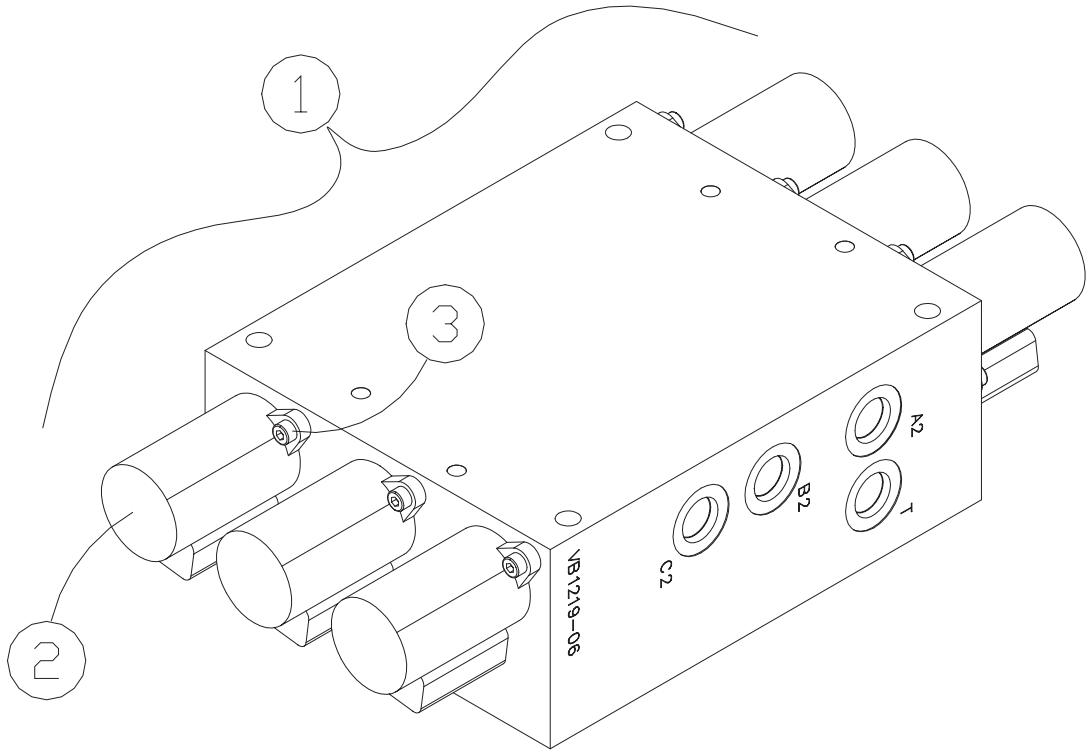

# ENGINE ASSEMBLY (Serial #: CFA 00318-Current)

| REF. NO. | PART NUMBER | QTY. | DESCRIPTION |
|---|---|---|---|
| 1 | 2051-763 | 1 | HOSE FUEL ENGINE |
| 2 | 0300-732 | 12 | CLAMP,HOSE,#4 |
| 3 | 0304-834 | 1 | HOSE,LINE,FUEL,9" |
| 4 | 8102-140 | 1 | CAPSCREW,HH,5/16-18UNCx2.75,GD |
| 5 | 8051-272 | 21 | WASHER,SPRING LOCK,3/8,ZN |
| 6 | 0200-329 | 2 | CAPSCREW,HH,M8x1.25x16MM |
| 7 | 8051-242 | 10 | WASHER,SPRING LOCK,5/16,ZN |
| 8 | 0310-467 | 1 | CLAMP,WIRE,1.0 |
| 9 | 8102-222 | 8 | CAPSCREW,HH,3/8-16 UNCx1.0,GD8 |
| 10 | 8102-591 | 4 | CAPSCREW,HH,5/8-11x3,YZ |
| 11 | 2051-024 | 1 | MNT ENGINE REAR RH |
| 12 | 0300-458 | 4 | MOUNT,ENGINE,REAR |
| 13 | 0304-948 | 4 | LIMITER,MNT,MOTOR |
| 14 | 8040-726 | 4 | NUT,HEX,NYLOCK,5/8-11 UNC,ZN |
| 15 | 0304-131 | 8 | CAPSCREW,HH, M14-1.5 X30MM,GD8 |
| 16 | 0304-839 | 8 | WASHER,SPRING LOCK,14MM |
| 17 | 2051-156 | 1 | MNT ENGINE FRONT RH |
| 18 | 0300-718 | 1 | W/PIN,CLEVIS (THROTTLE CABLE) |
| 19 | 0300-455 | 1 | CABLE,THROTTLE |
| 20 | 2045-565 | 1 | JOINT BALL SNAP CLIP |
| 21 | 8040-396 | 1 | NUT,HEX,NYLOCK,1/4-28 UNF,ZN |
| 22 | 0310-517 | 4 | CAPSCREW,HH,M6x1.0x35 |
| 23 | 8051-212 | 4 | WASHER,SPRING LOCK,1/4,ZN |
| 24 | 2051-019 | 1 | MNT ENGINE FRONT RH |
| 25 | 2051-025 | 1 | MNT ENGINE REAR LH |
| 26 | 0300-546 | 1 | CABLE,GROUND,ENGINE |
| 27 | 0304-507 | 1 | PLATE,FLYWHEEL |
| 28 | 8102-132 | 8 | CAPSCREW,HH,5/16-18UNCx1.0 GD8 |
| 29 | 0304-900 | 1 | MNT,PLATE,PUMP |
| 30 | 2051-580 | 1 | BRKT CABLE THROTTLE |
| 31 | 2051-779 | 1 | FAN PUSHER 16.00" BLADE 40* |
| 32 | 0200-111 | 1 | ENGINE,404C22,PERKINS |
| 33 | 2045-793 | 1 | BELT,FAN |
| 34 | 0200-377 | 1 | FILTER,OIL,ENGINE |
| 35 | 0200-178 | 1 | WLMT,BRKT,MNT,FILTER |
| 36 | 0200-338 | 1 | ASSY,FILTER,WATER |
| 37 | 0200-213 | 1 | FILTER,FUEL,PERKINS,404C22 |
| 38 | 0200-215 | 1 | ASSY,FILTER,FUEL,PERKINS,404C2 |
| 39 | 2051-764 | 1 | HOSE FUEL RETURN |
| 40 | 2051-841 | 1 | HOSE, FUEL,BULB-BOWL |
| 41 | 2051-842 | 1 | HOSE,FUEL,BOWL-PUMP |
| 42 | 2051-843 | 1 | HOSE,FUEL,PUMP-FILTER |
| 43 | 2051-844 | 1 | HOSE,FUEL,FILTER-ENGINE |
| 44 | 2051-619 | 1 | SPACER FAN |

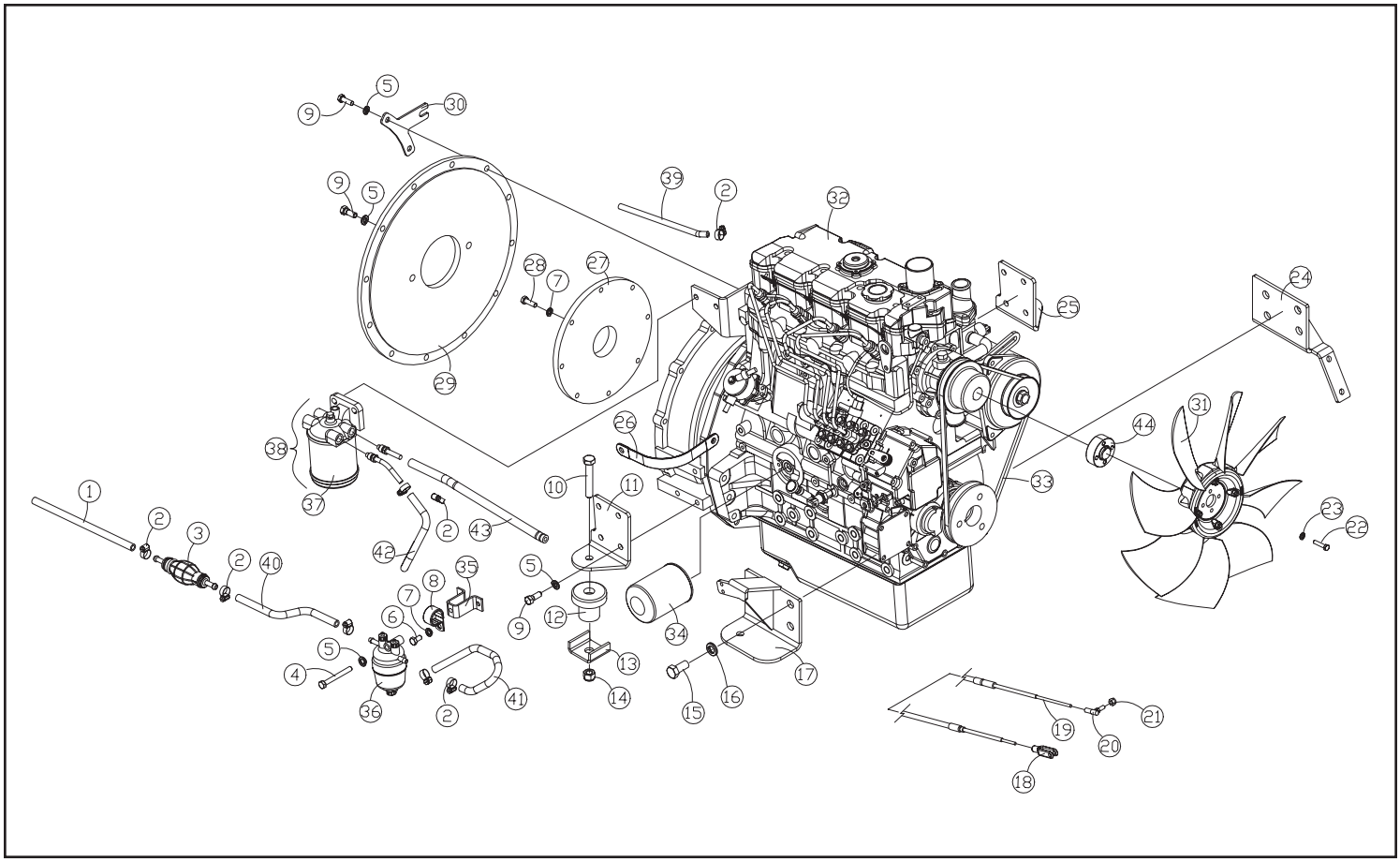

# INTAKE/EXHAUST ASSEMBLIES (Serial #: CFA 00318-Current)

| REF. NO. | PART NUMBER | QTY. | DESCRIPTION |
|---|---|---|---|
| 1 | 2052-455 | 1 | AIR FILTER SAFETY ELEMENT |
| 2 | 2052-454 | 1 | AIR FILTER PRIMARY ELEMENT |
| 3 | 0304-503 | 1 | VALVE,DUST |
| 4 | 0314-506 | 2 | CAPSCREW,HH,8MM-1.25x20MM |
| 5 | 8102-130 | 4 | CAPSCREW,HH 5/16-18x3/4,GR8 |
| 6 | 2051-893 | 1 | TUBE TAIL PIPE |
| 7 | 2052-302 | 1 | HOSE INTAKE SC 50 |
| 8 | 2051-437 | 1 | CLAMP HOSE #44 |
| 9 | 0300-686 | 1 | CLAMP,HOSE,2.0,#32 |
| 10 | 8051-242 | 14 | WASHER,SPRING LOCK,5/16,ZN |
| 11 | 0310-840 | 4 | CAPSCREW, SOC HD, M8-1.25x20 G |
| 12 | 2051-662 | 1 | SHROUD HEAT EXHAUST |
| 13 | 2051-666 | 1 | WLMT PIPE EXHAUST |
| 14 | 2051-867 | 1 | WLMT EXHAUST COUPLER |
| 15 | 0200-333 | 1 | TAILPIPE,CENTER |
| 16 | 0300-263 | 4 | CLAMP,MUFFLER,2" |
| 17 | 2051-866 | 1 | WLMT COUPLING EXHAUST |
| 18 | 2051-868 | 1 | WLMT EXHAUST MID-SECTION |
| 19 | 0304-511 | 2 | GASKET,MUFFLER |
| 20 | 0200-335 | 6 | SPRING,TAILPIPE |
| 21 | 8102-135 | 4 | CAPSCREW,HH,5/16-18X1.50ZN,GD8 |
| 22 | 2051-854 | 1 | WLMT PIPE TAIL EXHAUST |
| 23 | 2051-892 | 1 | MUFFLER |
| 24 | 2045-555 | 2 | BAND MNT MUFFLER |

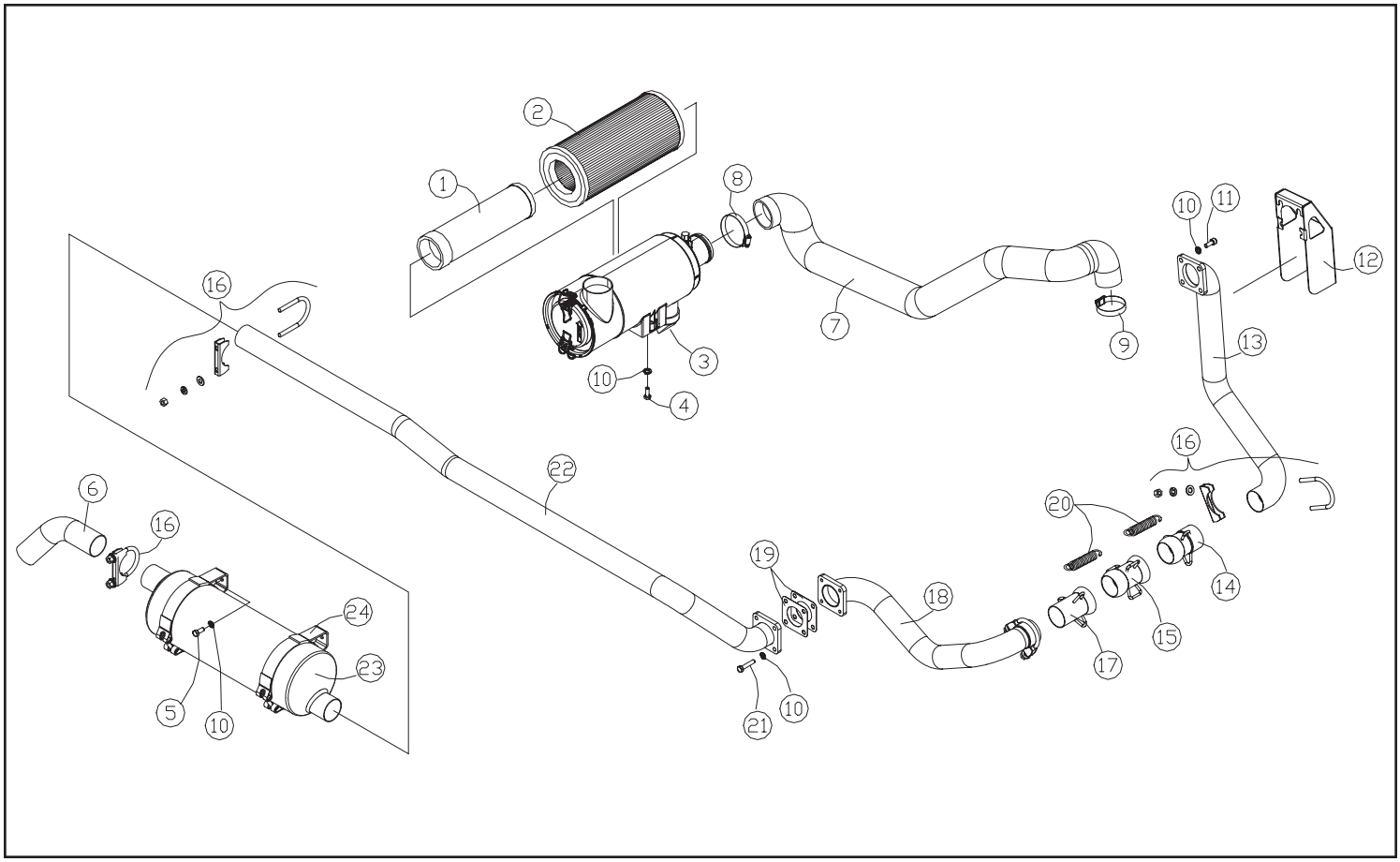

# BATTERY ASSEMBLY (Serial #: CFA 00318-Current)

| REF. NO. | PART NUMBER | QTY. | DESCRIPTION |
|---|---|---|---|
| 1 | 0300-692 | 2 | NUT,WING,1/4-20 |
| 2 | 2051-440 | 2 | HOOK BATTERY |
| 3 | 2045-141 | 1 | CLAMP BATTERY |
| 4 | 2051-439 | 1 | BATTERY 734MF |
| 5 | 0301-083 | 2 | PROTECTOR,POST,BATTERY |
| 6 | 2051-668 | 1 | CABLE BATTERY POSITIVE |
| 7 | 2051-669 | 1 | CABLE BATTERY NEGATIVE |

| REF. NO. | PART NUMBER | QTY. | DESCRIPTION |
|---|---|---|---|
| | | | |

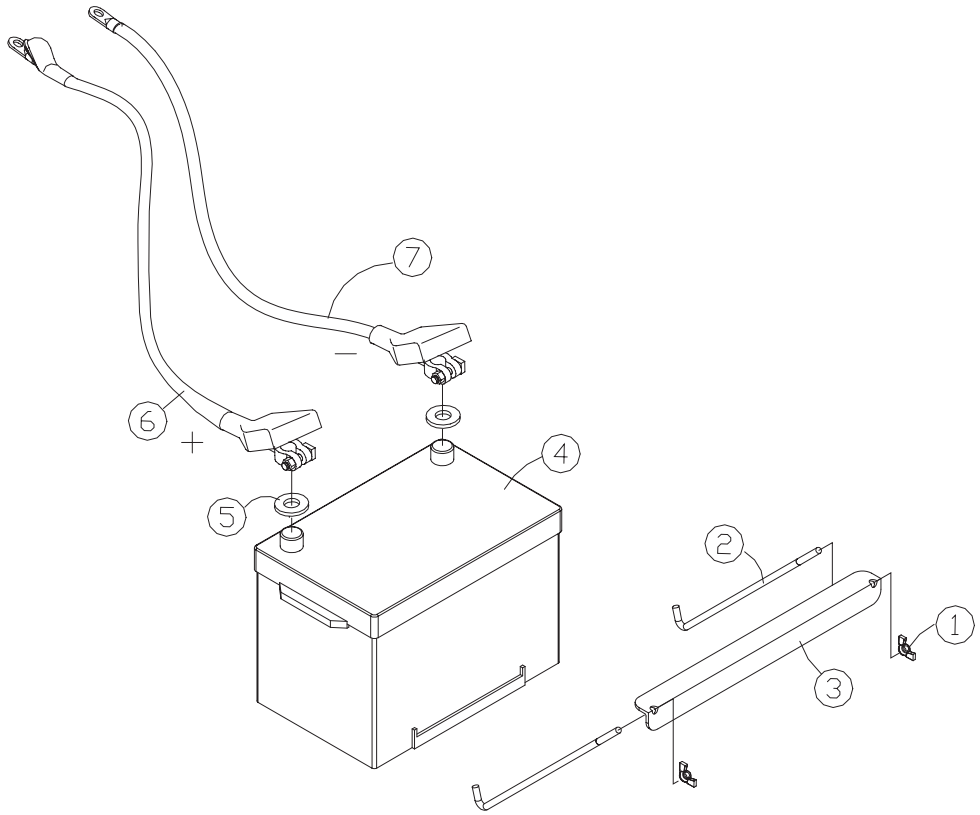

# FUSE PANEL ASSEMBLY (Serial #: CFA 00318-Current)

| REF. NO. | PART NUMBER | QTY. | DESCRIPTION |
|---|---|---|---|
| 1 | 2051-695 | 1 | HARNESS WIRE MAIN |
| 2 | 0310-807 | 2 | RELAY,MINI, 35 AMP |
| 3 | 0310-804 | 1 | FUSE,MAXI, 60 AMP |
| 4 | 0304-519 | 2 | RELAY,PLUG,GLOW |
| 5 | 0310-800 | 2 | FUSE,MAXI,20 AMP |
| 6 | 0310-803 | 1 | FUSE,MAXI, 50 AMP |
| 7 | 0310-802 | 2 | FUSE,MAXI, 40 AMP |
| 8 | 0310-794 | 3 | FUSE,MINI, 5 AMP |
| 9 | 0310-795 | 10 | FUSE,MINI,10 AMP |
| 10 | 0310-793 | 1 | FUSE,MINI,2 AMP |
| 11 | 0310-811 | 1 | DIODE, 3 AMP |
| 12 | 0310-806 | 3 | RELAY,MICRO, 20 AMP |
| 13 | 0200-559 | 1 | COVER,PANEL,FUSE,W/DECALS,RC50 |
| 14 | 0200-510 | 1 | RESISTOR,33OHM/3WATT,OHMITE43F |
| 15 | 0201-323 | 1 | RELAY,LATCHING |
| 16 | 2051-696 | 1 | ECU,HYDRAULIC,AUX (OPTIONAL) |

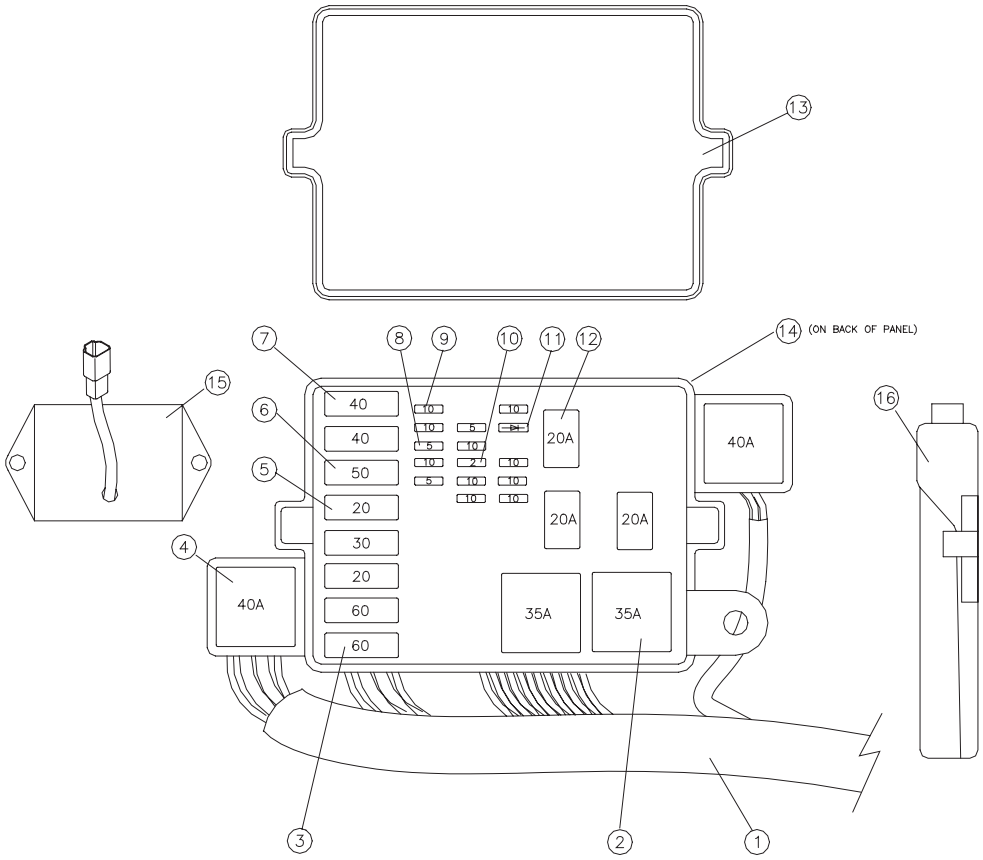

# TORSION AXLE ASSEMBLY (Serial #: CFA 00318-Current)

| REF. NO. | PART NUMBER | QTY. | DESCRIPTION |
|---|---|---|---|
| 1 | 2051-758 | 4 | CAPSCREW HH 3/4-16 x 2.0 GREASE ZERK ID |
| 2 | 8051-440 | 4 | WASHER,SPRING LOCK,3/4,ZN |
| 3 | 2050-109 | 4 | WASHER,TORSION |
| 4 | 2051-359 | 1 | WLMT AXLE TORSION REAR |
| 5 | 8102-588 | 16 | CAPSCREW,HH,5/8-11UNCx2.25,GD8 |
| 6 | 8050-406 | 16 | WASHER,WROUGHT,5/8,STD,ZN |
| 7 | 8051-431 | 16 | WASHER,SPRING LOCK,5/8,ZN |
| 8 | 8040-726 | 16 | NUT,HEX,NYLOCK,5/8-11 UNC,ZN |
| 9 | 2051-358 | 1 | WLMT AXLE TORSION FRONT |
| 10 | 0300-607 | 4 | ZERK,GREASE,1/4-28 |

| REF. NO. | PART NUMBER | QTY. | DESCRIPTION |
|---|---|---|---|
| | | | |

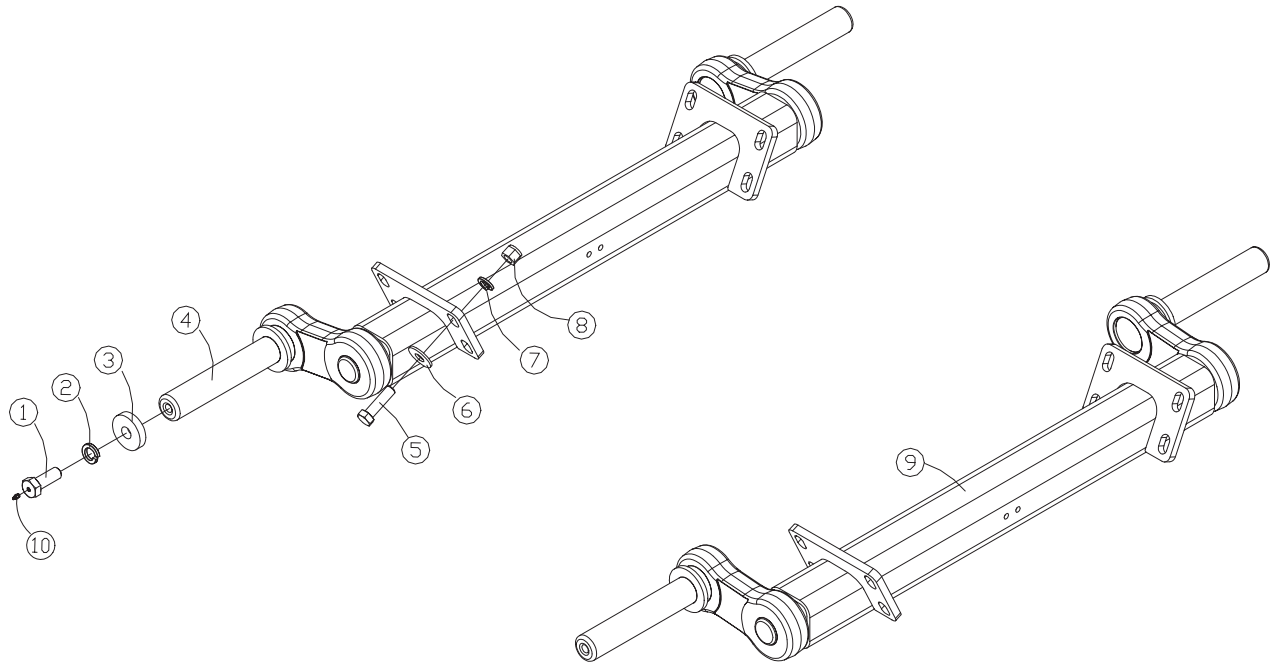

# UNDERCARRIAGE ASSEMBLY, LT (Serial #: CFA 00318-332)

| REF. NO. | PART NUMBER | QTY. | DESCRIPTION |
|---|---|---|---|
| 1 | 0702-006 | 1 | TRACK,15 x 165.9 |
| 2 | 0403-945 | 1 | WLMT RAIL LH |
| 3 | 8050-725 | 2 | WASHER,WROUGHT,1.25 STD,ZN |
| 4 | 2060-118 | 1 | WLMT FRONT IDLER BRACE |
| 5 | 2050-115 | 1 | WLMT,AXLE,14" WHEEL |
| 6 | 0702-115 | 4 | RING,SNAP,INT,PLATED |
| 7 | 0702-111 | 2 | CAP,WHEEL |
| 8 | 0304-722 | 10 | NUT,HEX,JAM,LOCKING,3/4-10UNC, |
| 9 | 0702-155 | 2 | WASHER,BEARING |
| 10 | 0702-106 | 4 | BEARING,CONE |
| 11 | 0702-105 | 4 | BEARING,CUP |
| 12 | 0702-098 | 2 | ASSY,SEAL |
| 13 | 2050-113 | 1 | ASSY,CYLINDER |
| 14 | 8102-685 | 1 | CAPSCREW,HH 3/4-10UNCx 4.5 GD8 |
| 15 | 0090-017 | 1 | BOLT BLEEDER |
| 16 | 0702-251 | 1 | ZERK,GREASE,1/8NPT,HIGH PRESSU |
| 17 | 0304-060 | 4 | SHAFT,AXLE |
| 18 | 0702-114 | 10 | RING,RETAINER,INT |
| 19 | 0304-117 | 8 | GUARD,BEARING |
| 20 | 0303-141 | 10 | SEAL,APY,1.250x2.062x.450 |
| 21 | 2010-062 | 16 | BEARING,ROLLER,NUP-205E |
| 22 | 0304-101 | 8 | WHEEL,10" |
| 23 | 0304-097 | 8 | SPACER,BEARING |
| 24 | 0304-661 | 8 | SEAL,GASKET,WHEEL |
| 25 | 0304-113 | 8 | WHEEL,CAP |
| 26 | 0304-319 | 8 | RING,SNAP,INNER WHEEL,PLATED |
| 27 | 8051-431 | 12 | WASHER,SPRING LOCK,5/8,ZN |
| 28 | 8102-587 | 12 | CAPSCREW,HH 5/8-11UNCx 2.0 GD8 |
| 29 | 0200-282 | 12 | NUT,FLANGE,M14x1.5 |
| 30 | 2051-165 | 1 | MOTOR DRIVE HYD 2-SPEED |
| 31 | 0702-113 | 1 | O-RING,2-037,2-625 ODx2.5 IDx. |
| 32 | 0700-145 | 1 | RING,SNAP,EXT,45mm |
| 33 | 8102-404 | 4 | CAPSCREW,HH 1/2-13UNCx1.25 GD8 |
| 34 | 2051-791 | 1 | WLMT PLATE BEARING |
| 35 | 0700-144 | 2 | RING,SNAP,INT,85mm |
| 36 | 0702-324 | 1 | BEARING (6209) |
| 37 | 0702-291 | 1 | ASSY HOUSING BEARING |
| 38 | 2035-134 | 1 | SEAL 1.975 x 3.370 x .763 |
| 39 | 0702-295 | 1 | RETAINER SEAL |
| 40 | 0702-294 | 1 | END CAP 3.346 x .295 |

| REF. NO. | PART NUMBER | QTY. | DESCRIPTION |
|---|---|---|---|
| 41 | 2060-207 | 1 | WLMT SPROCKET MACHINED |
| 42 | 0700-124 | 13 | NUT,TOPLOCK,1/2-13UNC,ZN,GD8 |
| 43 | 2050-152 | 13 | SPACER,WASHER |
| 44 | 2060-188 | 2 | RING MIDDLE 14.375" |
| 45 | 0702-305 | 1 | SUB-ASSY HSG BEARING |
| 46 | 0302-765 | 13 | SLEEVE,OUTER,TOOTH,SPROCKET |
| 47 | 0302-635 | 13 | TOOTH,DRIVE,SPROCKET |
| 48 | 2050-150 | 13 | SPACER,SPROCKET |
| 49 | 8102-423 | 13 | CAPSCREW,HH,1/2-13UNCx7.25,GD8 |
| 50 | 8102-405 | 3 | CAPSCREW,HH,1/2-13 UNCx1.5,GD8 |
| 51 | 0302-435 | 2 | FITTING,GREASE,1/8 NPT,90D |
| 52 | 2051-797 | 1 | WLMT SHIELD LH |
| 53 | 8051-272 | 2 | WASHER,SPRING LOCK,3/8,ZN |
| 54 | 8102-224 | 2 | CAPSCREW,HH,3/8-16UNCx1.25,GD8 |
| 55 | 8102-042 | 4 | CAPSCREW, HH 1/4-20UNC 1" GD8 |
| 56 | 8051-212 | 4 | WASHER,SPRING LOCK,1/4,ZN |
| 57 | 8102-144 | 2 | CAPSCREW HH 5/16-18 x 4" |
| 58 | 0201-227 | 2 | CLAMP,COVER,TCP-T4 |
| 59 | 0201-226 | 2 | CLAMP,SET,T4100-PP |
| 60 | 2051-481 | 2 | PLATE TUBE MOUNT |
| 61 | 2051-178 | 4 | CLAMP SET |
| 62 | 2051-800 | 2 | PLATE TUBE CLAMP |
| 63 | 8040-486 | 2 | NUT,HEX,NYLOCK,3/8-16 UNC,ZN |
| 64 | 0702-077 | 4 | BUSHING,DU,1.75 x 2.0 |
| 65 | 2051-799 | 1 | ASSY SPROCKET |
| 66 | 0702-254 | 2 | ASSY,WHEEL,14",SERVICE |
| 67 | 2010-108 | 8 | ASSY,WHEEL,END,SERVICE |
| 68 | 0702-202 | 2 | WHEEL,14",W/HUB |
| 69 | 8051-332 | 7 | WASHER,SPRING LOCK,1/2,ZN |
| 70 | 0702-112 | 1 | RETAINER,SEAL |

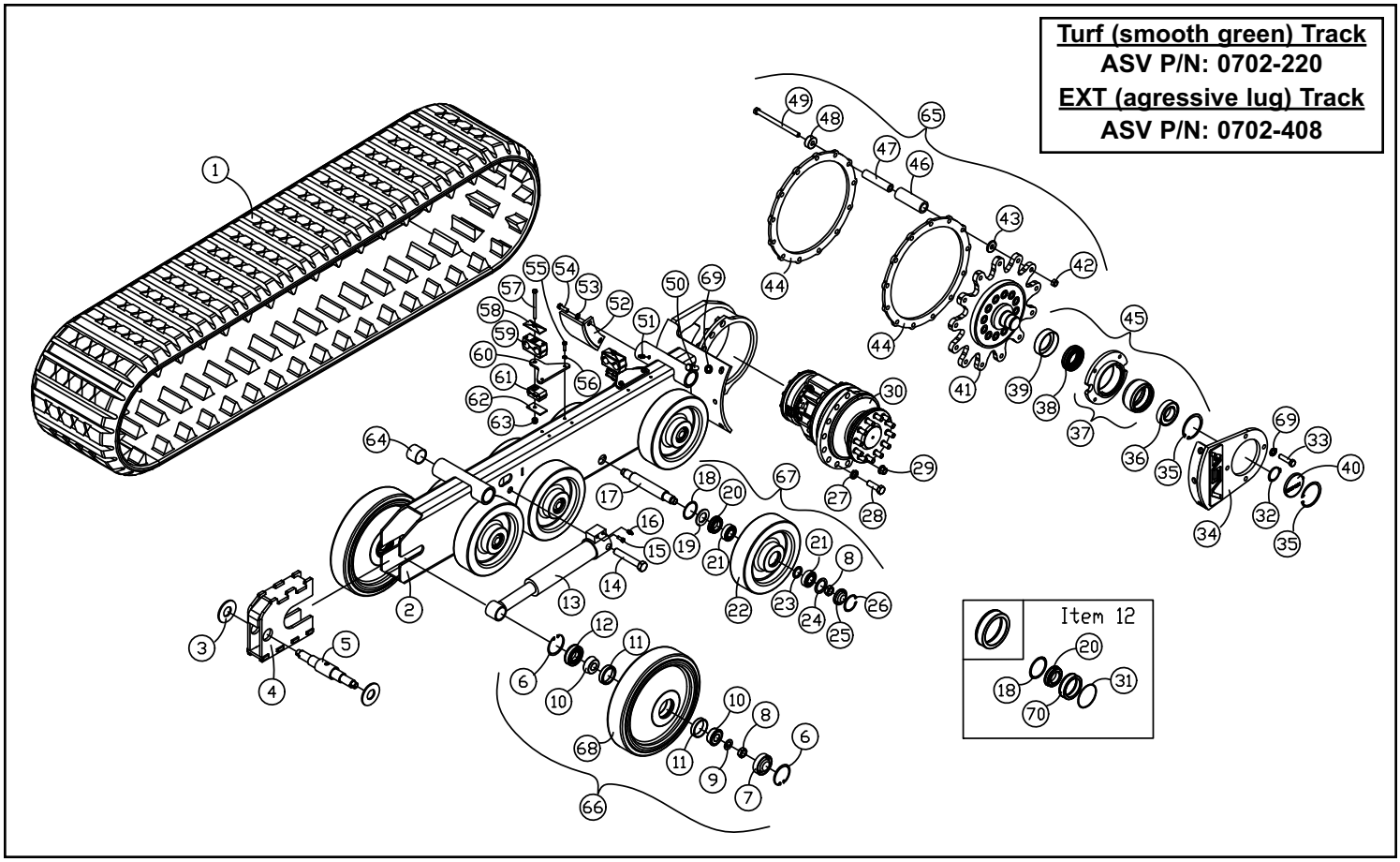

# UNDERCARRIAGE ASSEMBLY, LT (Serial #: CFA 00333-Current)

| REF. NO. | PART NUMBER | QTY. | DESCRIPTION |
|---|---|---|---|
| 1 | 0702-006 | 1 | TRACK,15 x 165.9 |
| 2 | 2051-785 | 1 | WLMT SUSP LH |
| 3 | 8050-725 | 2 | WASHER,WROUGHT,1.25 STD,ZN |
| 4 | 2051-476 | 1 | BRACE IDLER MACHINED |
| 5 | 2050-115 | 1 | WLMT,AXLE,14" WHEEL |
| 6 | 0702-115 | 4 | RING,SNAP,INT,PLATED |
| 7 | 0702-111 | 2 | CAP,WHEEL |
| 8 | 0304-722 | 10 | NUT,HEX,JAM,LOCKING,3/4-10UNC, |
| 9 | 0702-155 | 10 | WASHER,BEARING |
| 10 | 0702-106 | 4 | BEARING,CONE |
| 11 | 0702-105 | 4 | BEARING,CUP |
| 12 | 0702-098 | 2 | ASSY,SEAL |
| 13 | 2050-113 | 1 | ASSY,CYLINDER |
| 14 | 8102-685 | 1 | CAPSCREW,HH 3/4-10UNCx 4.5 GD8 |
| 15 | 0090-017 | 1 | BOLT BLEEDER |
| 16 | 0702-251 | 1 | ZERK,GREASE,1/8NPT,HIGH PRESSU |
| 17 | 0702-241 | 4 | AXLE,ONE PIECE,CENTER |
| 18 | 0304-118 | 8 | SNAP,RING |
| 19 | 0304-117 | 8 | GUARD,BEARING |
| 20 | 0303-141 | 8 | SEAL,APY,1.250x2.062x.450 |
| 21 | 0702-075 | 16 | BEARING,CONE |
| 22 | 0702-057 | 8 | WHEEL,10" |
| 23 | 0702-076 | 16 | BEARING,CUP |
| 24 | 0702-114 | 1 | RING,RETAINER,INT |
| 25 | 0702-132 | 8 | CAP,WHEEL |
| 26 | 0702-141 | 8 | RING,RETAINING,INTERNAL |
| 27 | 8051-431 | 12 | WASHER,SPRING LOCK,5/8,ZN |
| 28 | 8102-587 | 12 | CAPSCREW,HH 5/8-11UNCx 2.0 GD8 |
| 29 | 0200-282 | 12 | NUT,FLANGE,M14x1.5 |
| 30 | 2051-165 | 1 | MOTOR DRIVE HYD 2-SPEED |
| 31 | 0702-113 | 1 | O-RING,2-037,2-625 ODx2.5 IDx. |
| 32 | 0700-145 | 1 | RING,SNAP,EXT,45mm |
| 33 | 8102-404 | 4 | CAPSCREW,HH 1/2-13UNCx1.25 GD8 |
| 34 | 2051-791 | 1 | WLMT PLATE BEARING |
| 35 | 0700-144 | 2 | RING,SNAP,INT,85mm |
| 36 | 0702-324 | 1 | BEARING (6209) |
| 37 | 0702-291 | 1 | ASSY HOUSING BEARING |
| 38 | 2035-134 | 1 | SEAL 1.975 x 3.370 x .763 |
| 39 | 0702-295 | 1 | RETAINER SEAL |
| 40 | 0702-294 | 1 | END CAP 3.346 x .295 |

| REF. NO. | PART NUMBER | QTY. | DESCRIPTION |
|---|---|---|---|
| 41 | 2060-207 | 1 | WLMT SPROCKET MACHINED |
| 42 | 0700-124 | 13 | NUT,TOPLOCK,1/2-13UNC,ZN,GD8 |
| 43 | 2050-152 | 13 | SPACER,WASHER |
| 44 | 2060-188 | 2 | RING MIDDLE 14.375" |
| 45 | 0702-305 | 1 | SUB-ASSY HSG BEARING |
| 46 | 0302-765 | 13 | SLEEVE,OUTER,TOOTH,SPROCKET |
| 47 | 0302-635 | 13 | TOOTH,DRIVE,SPROCKET |
| 48 | 2050-150 | 13 | SPACER,SPROCKET |
| 49 | 8102-423 | 13 | CAPSCREW,HH,1/2-13UNCx7.25,GD8 |
| 50 | 8102-405 | 3 | CAPSCREW,HH,1/2-13 UNCx1.5,GD8 |
| 51 | 0302-435 | 2 | FITTING,GREASE,1/8 NPT,90D |
| 52 | 2051-797 | 1 | WLMT SHIELD LH |
| 53 | 8051-272 | 2 | WASHER,SPRING LOCK,3/8,ZN |
| 54 | 8102-224 | 2 | CAPSCREW,HH,3/8-16UNCx1.25,GD8 |
| 55 | 8102-042 | 4 | CAPSCREW, HH 1/4-20UNC 1" GD8 |
| 56 | 8051-212 | 4 | WASHER,SPRING LOCK,1/4,ZN |
| 57 | 8102-144 | 2 | CAPSCREW HH 5/16-18 x 4" |
| 58 | 0201-227 | 2 | CLAMP,COVER,TCP-T4 |
| 59 | 0201-226 | 2 | CLAMP,SET,T4100-PP |
| 60 | 2051-481 | 2 | PLATE TUBE MOUNT |
| 61 | 2051-178 | 4 | CLAMP SET |
| 62 | 2051-800 | 2 | PLATE TUBE CLAMP |
| 63 | 8040-486 | 2 | NUT,HEX,NYLOCK,3/8-16 UNC,ZN |
| 64 | 0702-077 | 4 | BUSHING,DU,1.75 x 2.0 |
| 65 | 2051-799 | 1 | ASSY SPROCKET |
| 66 | 0702-254 | 2 | ASSY,WHEEL,14",SERVICE |
| 67 | 0702-253 | 8 | ASSY,MIDWHEEL,10",SERVICE |
| 68 | 0702-202 | 2 | WHEEL,14",W/HUB |
| 69 | 8051-332 | 7 | WASHER,SPRING LOCK,1/2,ZN |
| 70 | 0702-112 | 1 | RETAINER,SEAL |

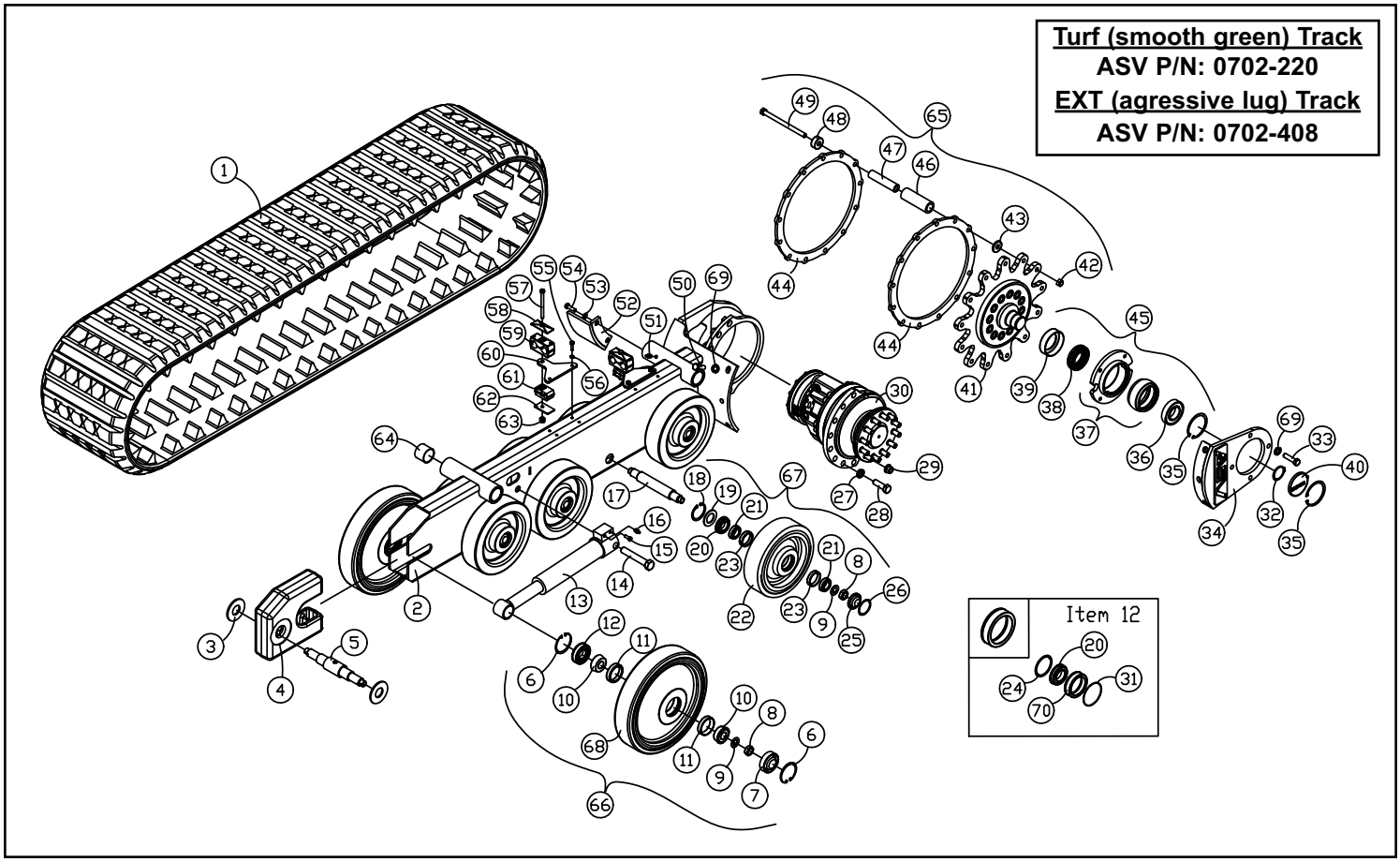

# UNDERCARRIAGE ASSEMBLY, RT (Serial #: CFA 00318-332)

| REF. NO. | PART NUMBER | QTY. | DESCRIPTION |
|---|---|---|---|
| 1 | 0702-006 | 1 | TRACK,15 x 165.9 |
| 2 | 0403-944 | 1 | WLMT RAIL RH |
| 3 | 8050-725 | 2 | WASHER,WROUGHT,1.25 STD,ZN |
| 4 | 2060-118 | 1 | WLMT FRONT IDLER BRACE |
| 5 | 2050-115 | 1 | WLMT,AXLE,14" WHEEL |
| 6 | 0702-115 | 4 | RING,SNAP,INT,PLATED |
| 7 | 0702-111 | 2 | CAP,WHEEL |
| 8 | 0304-722 | 10 | NUT,HEX,JAM,LOCKING,3/4-10UNC, |
| 9 | 0702-155 | 2 | WASHER,BEARING |
| 10 | 0702-106 | 4 | BEARING,CONE |
| 11 | 0702-105 | 4 | BEARING,CUP |
| 12 | 0702-098 | 2 | ASSY,SEAL |
| 13 | 2050-113 | 1 | ASSY,CYLINDER |
| 14 | 8102-685 | 1 | CAPSCREW,HH 3/4-10UNCx 4.5 GD8 |
| 15 | 0090-017 | 1 | BOLT BLEEDER |
| 16 | 0702-251 | 1 | ZERK,GREASE,1/8NPT,HIGH PRESSU |
| 17 | 0304-060 | 4 | SHAFT,AXLE |
| 18 | 0702-114 | 10 | RING,RETAINER,INT |
| 19 | 0304-117 | 8 | GUARD,BEARING |
| 20 | 0303-141 | 10 | SEAL,APY,1.250x2.062x.450 |
| 21 | 2010-062 | 16 | BEARING,ROLLER,NUP-205E |
| 22 | 0304-101 | 8 | WHEEL,10" |
| 23 | 0304-097 | 8 | SPACER,BEARING |
| 24 | 0304-661 | 8 | SEAL,GASKET,WHEEL |
| 25 | 0304-113 | 8 | WHEEL,CAP |
| 26 | 0304-319 | 8 | RING,SNAP,INNER WHEEL,PLATED |
| 27 | 8051-431 | 12 | WASHER,SPRING LOCK,5/8,ZN |
| 28 | 8102-587 | 12 | CAPSCREW,HH 5/8-11UNCx 2.0 GD8 |
| 29 | 0200-282 | 12 | NUT,FLANGE,M14x1.5 |
| 30 | 2051-165 | 1 | MOTOR DRIVE HYD 2-SPEED |
| 31 | 0702-113 | 1 | O-RING,2-037,2-625 ODx2.5 IDx. |
| 32 | 0700-145 | 1 | RING,SNAP,EXT,45mm |
| 33 | 8102-404 | 4 | CAPSCREW,HH 1/2-13UNCx1.25 GD8 |
| 34 | 2051-791 | 1 | WLMT PLATE BEARING |
| 35 | 0700-144 | 2 | RING,SNAP,INT,85mm |
| 36 | 0702-324 | 1 | BEARING (6209) |
| 37 | 0702-291 | 1 | ASSY HOUSING BEARING |
| 38 | 2035-134 | 1 | SEAL 1.975 x 3.370 x .763 |
| 39 | 0702-295 | 1 | RETAINER SEAL |
| 40 | 0702-294 | 1 | END CAP 3.346 x .295 |

| REF. NO. | PART NUMBER | QTY. | DESCRIPTION |
|---|---|---|---|
| 41 | 2060-207 | 1 | WLMT SPROCKET MACHINED |
| 42 | 0700-124 | 13 | NUT,TOPLOCK,1/2-13UNC,ZN,GD8 |
| 43 | 2050-152 | 13 | SPACER,WASHER |
| 44 | 2060-188 | 2 | RING MIDDLE 14.375" |
| 45 | 0702-305 | 1 | SUB-ASSY HSG BEARING |
| 46 | 0302-765 | 13 | SLEEVE,OUTER,TOOTH,SPROCKET |
| 47 | 0302-635 | 13 | TOOTH,DRIVE,SPROCKET |
| 48 | 2050-150 | 13 | SPACER,SPROCKET |
| 49 | 8102-423 | 13 | CAPSCREW,HH,1/2-13UNCx7.25,GD8 |
| 50 | 8102-405 | 3 | CAPSCREW,HH,1/2-13 UNCx1.5,GD8 |
| 51 | 0302-435 | 2 | FITTING,GREASE,1/8 NPT,90D |
| 52 | 2051-798 | 1 | WLMT SHIELD RH |
| 53 | 8051-272 | 2 | WASHER,SPRING LOCK,3/8,ZN |
| 54 | 8102-224 | 2 | CAPSCREW,HH,3/8-16UNCx1.25,GD8 |
| 55 | 8102-042 | 4 | CAPSCREW, HH 1/4-20UNC 1" GD8 |
| 56 | 8051-212 | 4 | WASHER,SPRING LOCK,1/4,ZN |
| 57 | 8102-144 | 2 | CAPSCREW HH 5/16-18 x 4" |
| 58 | 0201-227 | 2 | CLAMP,COVER,TCP-T4 |
| 59 | 0201-226 | 2 | CLAMP,SET,T4100-PP |
| 60 | 2051-481 | 2 | PLATE TUBE MOUNT |
| 61 | 2051-178 | 4 | CLAMP SET |
| 62 | 2051-800 | 2 | PLATE TUBE CLAMP |
| 63 | 8040-486 | 2 | NUT,HEX,NYLOCK,3/8-16 UNC,ZN |
| 64 | 0702-077 | 4 | BUSHING,DU,1.75 x 2.0 |
| 65 | 2051-799 | 1 | ASSY SPROCKET |
| 66 | 0702-254 | 2 | ASSY,WHEEL,14",SERVICE |
| 67 | 2010-108 | 8 | ASSY,WHEEL,END,SERVICE |
| 68 | 0702-202 | 2 | WHEEL,14",W/HUB |
| 69 | 8051-332 | 7 | WASHER,SPRING LOCK,1/2,ZN |
| 70 | 0702-112 | 1 | RETAINER,SEAL |

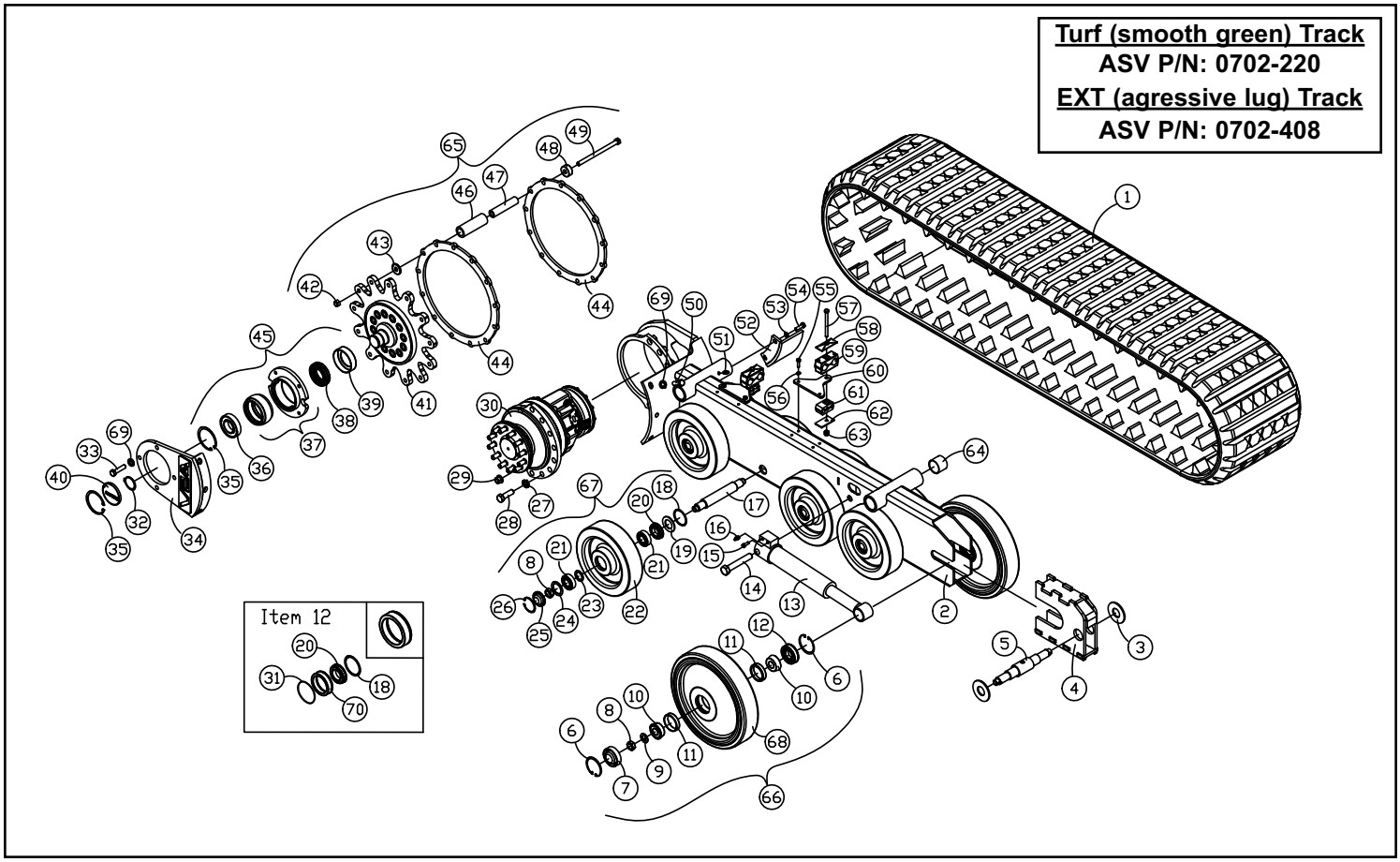

# UNDERCARRIAGE ASSEMBLY, RT (Serial #: CFA 00333-Current)

| REF. NO. | PART NUMBER | QTY. | DESCRIPTION |
|---|---|---|---|
| 1 | 0702-006 | 1 | TRACK,15 x 165.9 |
| 2 | 2051-790 | 1 | WLMT SUSP,RH |
| 3 | 8050-725 | 2 | WASHER,WROUGHT,1.25 STD,ZN |
| 4 | 2051-476 | 1 | BRACE IDLER MACHINED |
| 5 | 2050-115 | 1 | WLMT,AXLE,14" WHEEL |
| 6 | 0702-115 | 4 | RING,SNAP,INT,PLATED |
| 7 | 0702-111 | 2 | CAP,WHEEL |
| 8 | 0304-722 | 10 | NUT,HEX,JAM,LOCKING,3/4-10UNC, |
| 9 | 0702-155 | 10 | WASHER,BEARING |
| 10 | 0702-106 | 4 | BEARING,CONE |
| 11 | 0702-105 | 4 | BEARING,CUP |
| 12 | 0702-098 | 2 | ASSY,SEAL |
| 13 | 2050-113 | 1 | ASSY,CYLINDER |
| 14 | 8102-685 | 1 | CAPSCREW,HH 3/4-10UNCx 4.5 GD8 |
| 15 | 0090-017 | 1 | BOLT BLEEDER |
| 16 | 0702-251 | 1 | ZERK,GREASE,1/8NPT,HIGH PRESSU |
| 17 | 0702-241 | 4 | AXLE,ONE PIECE,CENTER |
| 18 | 0304-118 | 8 | SNAP,RING |
| 19 | 0304-117 | 8 | GUARD,BEARING |
| 20 | 0303-141 | 8 | SEAL,APY,1.250x2.062x.450 |
| 21 | 0702-075 | 16 | BEARING,CONE |
| 22 | 0702-057 | 8 | WHEEL,10" |
| 23 | 0702-076 | 16 | BEARING,CUP |
| 24 | 0702-114 | 1 | RING,RETAINER,INT |
| 25 | 0702-132 | 8 | CAP,WHEEL |
| 26 | 0702-141 | 8 | RING,RETAINING,INTERNAL |
| 27 | 8051-431 | 12 | WASHER,SPRING LOCK,5/8,ZN |
| 28 | 8102-587 | 12 | CAPSCREW,HH 5/8-11UNCx 2.0 GD8 |
| 29 | 0200-282 | 12 | NUT,FLANGE,M14x1.5 |
| 30 | 2051-165 | 1 | MOTOR DRIVE HYD 2-SPEED |
| 31 | 0702-113 | 1 | O-RING,2-037,2-625 ODx2.5 IDx. |
| 32 | 0700-145 | 1 | RING,SNAP,EXT,45mm |
| 33 | 8102-404 | 4 | CAPSCREW,HH 1/2-13UNCx1.25 GD8 |
| 34 | 2051-791 | 1 | WLMT PLATE BEARING |
| 35 | 0700-144 | 2 | RING,SNAP,INT,85mm |
| 36 | 0702-324 | 1 | BEARING (6209) |
| 37 | 0702-291 | 1 | ASSY HOUSING BEARING |
| 38 | 2035-134 | 1 | SEAL 1.975 x 3.370 x .763 |
| 39 | 0702-295 | 1 | RETAINER SEAL |
| 40 | 0702-294 | 1 | END CAP 3.346 x .295 |

| REF. NO. | PART NUMBER | QTY. | DESCRIPTION |
|---|---|---|---|
| 41 | 2060-207 | 1 | WLMT SPROCKET MACHINED |
| 42 | 0700-124 | 13 | NUT,TOPLOCK,1/2-13UNC,ZN,GD8 |
| 43 | 2050-152 | 13 | SPACER,WASHER |
| 44 | 2060-188 | 2 | RING MIDDLE 14.375" |
| 45 | 0702-305 | 1 | SUB-ASSY HSG BEARING |
| 46 | 0302-765 | 13 | SLEEVE,OUTER,TOOTH,SPROCKET |
| 47 | 0302-635 | 13 | TOOTH,DRIVE,SPROCKET |
| 48 | 2050-150 | 13 | SPACER,SPROCKET |
| 49 | 8102-423 | 13 | CAPSCREW,HH,1/2-13UNCx7.25,GD8 |
| 50 | 8102-405 | 3 | CAPSCREW,HH,1/2-13 UNCx1.5,GD8 |
| 51 | 0302-435 | 2 | FITTING,GREASE,1/8 NPT,90D |
| 52 | 2051-798 | 1 | WLMT SHIELD RH |
| 53 | 8051-272 | 2 | WASHER,SPRING LOCK,3/8,ZN |
| 54 | 8102-224 | 2 | CAPSCREW,HH,3/8-16UNCx1.25,GD8 |
| 55 | 8102-042 | 4 | CAPSCREW, HH 1/4-20UNC 1" GD8 |
| 56 | 8051-212 | 4 | WASHER,SPRING LOCK,1/4,ZN |
| 57 | 8102-144 | 2 | CAPSCREW HH 5/16-18 x 4" |
| 58 | 0201-227 | 2 | CLAMP,COVER,TCP-T4 |
| 59 | 0201-226 | 2 | CLAMP,SET,T4100-PP |
| 60 | 2051-481 | 2 | PLATE TUBE MOUNT |
| 61 | 2051-178 | 4 | CLAMP SET |
| 62 | 2051-800 | 2 | PLATE TUBE CLAMP |
| 63 | 8040-486 | 2 | NUT,HEX,NYLOCK,3/8-16 UNC,ZN |
| 64 | 0702-077 | 4 | BUSHING,DU,1.75 x 2.0 |
| 65 | 2051-799 | 1 | ASSY SPROCKET |
| 66 | 0702-254 | 2 | ASSY,WHEEL,14",SERVICE |
| 67 | 0702-253 | 8 | ASSY,MIDWHEEL,10",SERVICE |
| 68 | 0702-202 | 2 | WHEEL,14",W/HUB |
| 69 | 8051-332 | 7 | WASHER,SPRING LOCK,1/2,ZN |
| 70 | 0702-112 | 1 | RETAINER,SEAL |

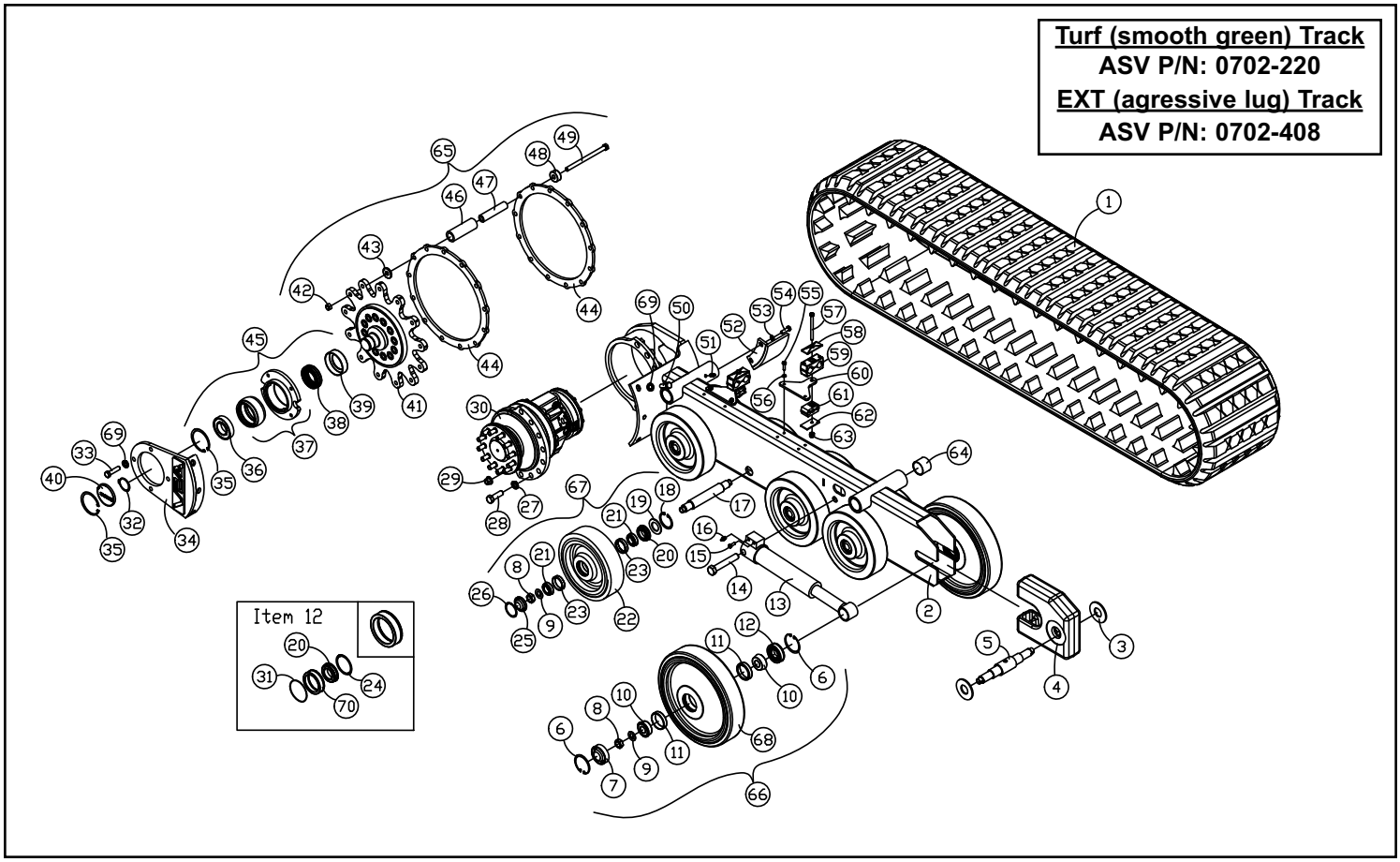

# SNOW BLADE (OPTIONAL) (Serial #: CFA 00318-Current)

| REF. NO. | PART NUMBER | QTY. | DESCRIPTION |
|---|---|---|---|
| 1 | 2052-351 | 7 | ZERK GREASE 1/4"-28 UNF |
| 2 | 2052-350 | 8 | SNAP RING |
| 3 | 2052-349 | 8 | BUSHING 1" |
| 4 | 2052-348 | 3 | PIN HINGE |
| 5 | 2052-347 | 2 | WLMT SADDLE ARM LIFT |
| 6 | 2052-352 | 4 | PIN 5/8 X 3/4" |
| 7 | 2052-353 | 4 | PIN LYNCH 3/16" |
| 8 | 2052-386 | 1 | WLMT MOUNT CYLINDER |
| 9 | 2052-381 | 2 | COUPLER FLAT FACE MALE |
| 10 | 2052-382 | 2 | COUPLER FLAT FACE FEMALE |
| 11 | 2052-275 | 1 | HOSE -6 3000PSI 6FFORX 28" |
| 12 | 2052-276 | 1 | HOSE -6 3000PSI 6FFORX 22" |
| 13 | 2052-383 | 5 | ELBOW 90 |
| 14 | 2052-273 | 1 | CYLINDER LIFT |
| 15 | 2052-387 | 1 | PIN CYLINDER |
| 16 | 2052-346 | 1 | WLMT ARM LIFT |
| 17 | 2052-377 | 2 | PLATE SUPPROT LEG |
| 18 | 2052-378 | 2 | LG HHCS 1/2 NC X 1 3/4" |
| 19 | 2052-379 | 2 | SAPCER BOLT |
| 20 | 2052-363 | 2 | NUT C-LOCK 1/2" NC |
| 21 | 2052-356 | 1 | WLMT PLATE INTERFACE |
| 22 | 2052-274 | 1 | CYLINDER ANGLE |
| 23 | 2052-360 | 1 | PIN SNOW BALDE |
| 24 | 2052-362 | 1 | 1/2" NC X 3 1/2 LG HHCS |
| 25 | 2052-394 | 1 | PIN CYLINDER |
| 26 | 2052-395 | 1 | BUSHING |
| 27 | 2052-396 | 2 | RING SNAP 1/1/4" DIA HEAVY |
| 28 | 2052-369 | 7 | HEX NUT TOP LOCK 1" NC |
| 29 | 2052-367 | 2 | SNAP RING 1 9/16" HEAVY DUTY |
| 30 | 2052-366 | 2 | BUSHING NARROW |
| 31 | 2052-364 | 4 | BUSHING 1 9/16" X 2" |
| 32 | 2052-380 | 1 | ADAPTER RESRTICTED SWIVEL |
| 33 | 2052-365 | 1 | PIN PIVOT BLADE |
| 34 | 2052-361 | 2 | PLATE |
| 35 | 2052-368 | 7 | LG HHCS 1" NC X 3 1/2" |
| 36 | 2052-393 | 2 | NUT HEX 3/4" TOP LOCK NC |
| 37 | 2052-392 | 2 | 2052-392 |
| 38 | 2052-370 | 2 | WLMT GUIDE |
| 39 | 2052-371 | 2 | SPRING |
| 40 | 2052-374 | 2 | WASHER FLAT 1/2" |
| 41 | 2052-391 | 4 | NUT HEX 1/2" NC |
| 42 | 2052-359 | 1 | WLMT EDGE |
| 43 | 2052-278 | 1 | EDGE CUTTING BLADE SNOW 84" |
| 44 | 2052-372 | 14 | BOLT PLOW 5/8 X 3 1/4" LG |
| 45 | 2052-373 | 14 | HEX NUT TOP LOCK 5/8" |
| 46 | 2052-358 | 1 | WLMT MOLDBOARD 84" |
| 47 | 2052-280 | 2 | KIT SHOE SKID |
| 48 | 2052-388 | 2 | SHOE WEAR |
| 49 | 2052-389 | 20 | WASHER FLAT 1 3/8" |
| 50 | 2052-390 | 2 | PIN LYNCH 7/16" X 1 3/4" |
| 51 | 2052-354 | 1 | ROD ALIGNMENT SCOUT |
| 52 | 2052-355 | 1 | PIN 5/8" X 3/4" |
| 53 | 2052-375 | 1 | ASSY HOSE CLAMP |
| 54 | 2052-376 | 1 | LG HHCS 5/16 X 1 1/2" |
| 55 | 2052-384 | 1 | HOSE HYD 44 1/2 LG |
| 56 | 2052-385 | 1 | HOSE HYD 44 1/2 LG (37 FLARE) |

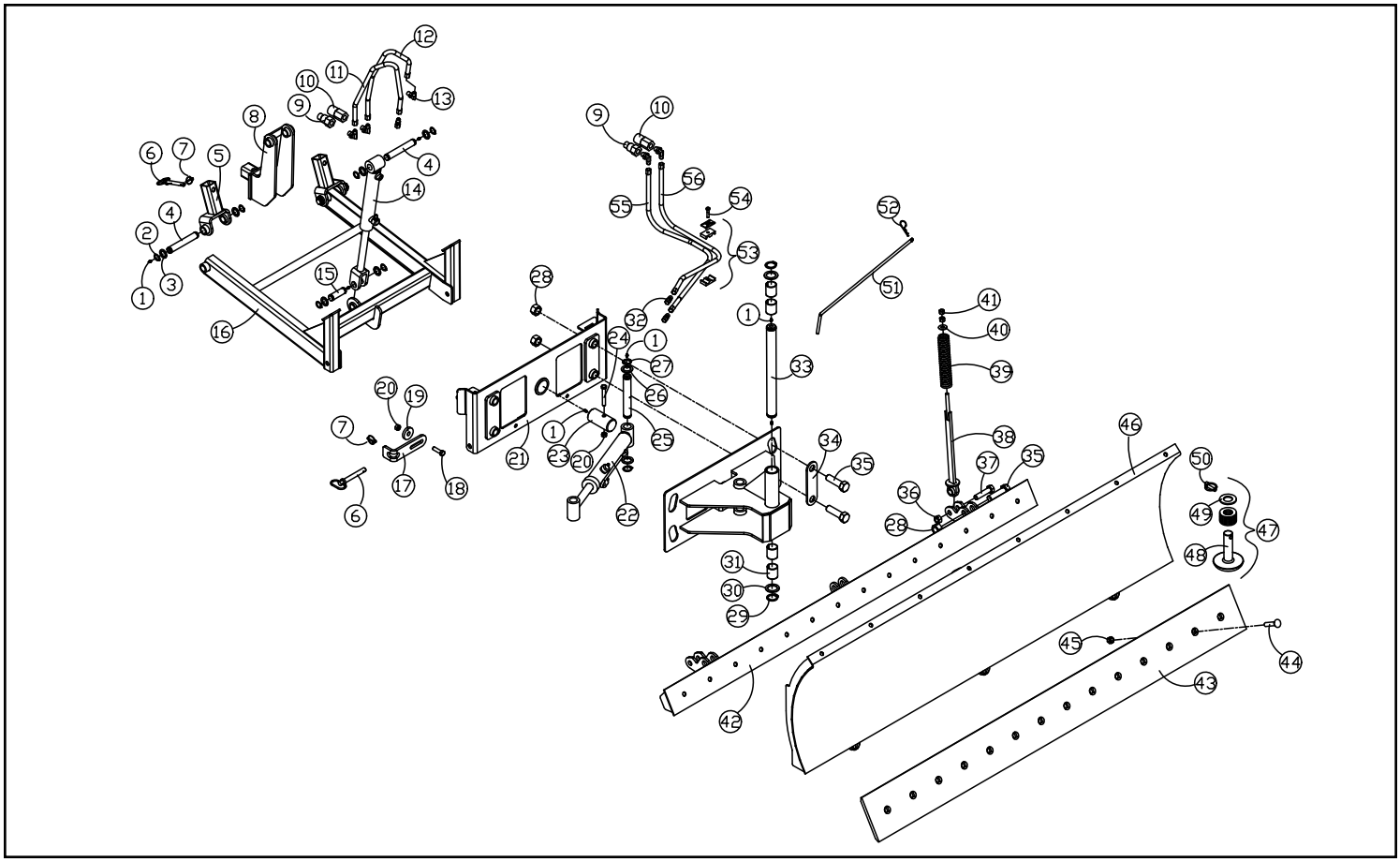

# PERSONNEL CARRIER (OPTIONAL) (Serial #: CFA 00318-Current)

| REF. NO. | PART NUMBER | QTY. | DESCRIPTION |
|---|---|---|---|
| 1 | 2052-167 | 2 | SCREEN SIDE |
| 2 | 8104-042 | 16 | CAPSCREW,HH 1/4-28UNFx1.0 GD8 |
| 3 | 8051-212 | 64 | WASHER,SPRING LOCK,1/4,ZN |
| 4 | 8050-222 | 64 | WASHER,WROUGHT,1/4,STD,ZN |
| 5 | 2052-022 | 1 | WLMT ROPS PERSONNEL CARRIER |
| 6 | 8102-411 | 4 | CAPSCREW,HH,1/2-13 UNCx3.0,GD8 |
| 7 | 8050-347 | 32 | WASHER,WROUGHT,1/2,STD,ZN |
| 8 | 2052-166 | 2 | CATCH LATCH |
| 9 | 8040-606 | 18 | NUT,HEX,NYLOCK,1/2-13 UNC,ZN |
| 10 | 8102-407 | 10 | CAPSCREW,HH,1/2-13UNCx2.0,GD8, |
| 11 | 8040-486 | 12 | NUT,HEX,NYLOCK,3/8-16 UNC,ZN |
| 12 | 8050-282 | 32 | WASHER,WROUGHT,3/8,STD,ZN |
| 13 | 8051-272 | 20 | WASHER,SPRING LOCK,3/8,ZN |
| 14 | 8102-234 | 12 | CAPSCREW,HH,3/8-16UNCx4.0,GD8, |
| 15 | 8102-039 | 48 | CAPSCREW,HH,1/4-20UNCx.625,GD8 |
| 16 | 8102-228 | 8 | CAPSCREW,HH,3/8-16UNCX2.25"GR8 |
| 17 | 8102-404 | 4 | CAPSCREW,HH 1/2-13UNCx1.25 GD8 |
| 18 | 8102-315 | 2 | CAPSCREW,HH 7/16-14UNCx1.5 GD8 |
| 19 | 8050-320 | 8 | WASHER,WROUGHT,7/16,SAE,ZN |
| 20 | 8040-546 | 6 | NUT,HEX,NYLOCK,7/16-14 UNC,ZN |
| 21 | 2052-182 | 4 | SEAT BELT W/SHOULDER HARNESS |
| 22 | 8102-314 | 4 | CAPSCREW HH 7/16-14 UNC x1.25 GD8 |
| 23 | 2052-170 | 2 | PANEL SIDE |
| 24 | 2052-041 | 2 | CUSHION BACK |
| 25 | 2052-031 | 1 | WDMT SEAT BOX LH |
| 26 | 2052-040 | 2 | CUSHION SEAT |
| 27 | 2052-032 | 1 | WDMT SEAT BOX RH |
| 28 | 8060-728 | 20 | RIVET,BLIND3/16X.550 1Y SSB66S |
| 29 | 2052-172 | 2 | CLASP LATCH |
| 30 | 0310-641 | 4 | MOUNT,SHOCK,90^ |
| 31 | 0200-289 | 4 | WLMT,MNT,BRACKET,BALL STUD |
| 32 | 2052-174 | 4 | SPRING GAS ASSIST |
| 33 | 2052-178 | 2 | SEAT EDGE SEAT |
| 34 | 2052-177 | 2 | SEAL EDGE SIDE OPENING |
| 35 | 2052-160 | 2 | PADDLE LATCH |
| 36 | 0304-485 | 8 | SCREW,MACH,10-24x3/4,STAINLESS |

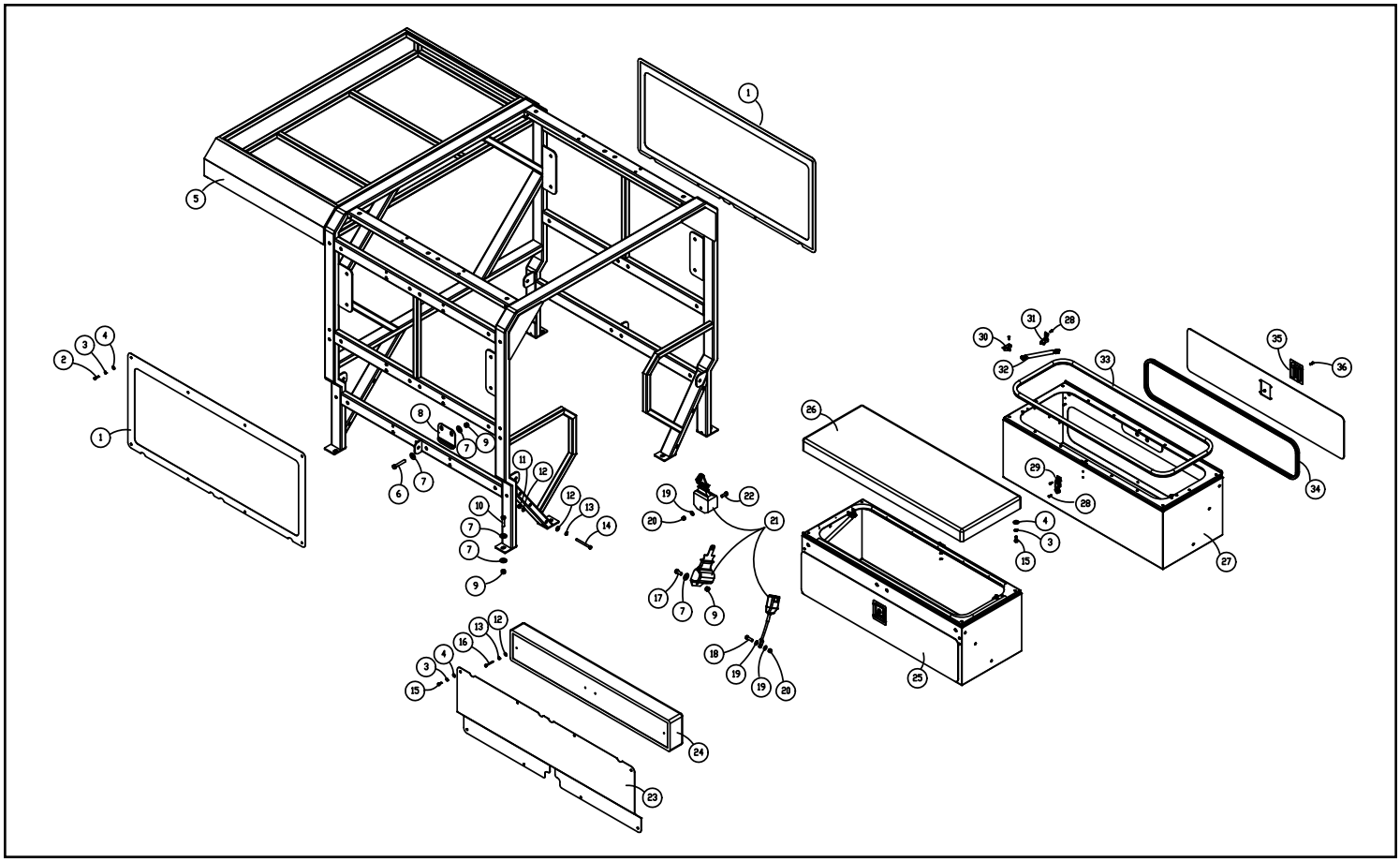

**Terex Construction Americas**
8800 Rostin Road
Southaven, MS 38671
**(888)-201-6008**
**(662)-393-1800**
**www.terex.com**