Master Parts Manual

RC-85
Rubber Track Loader

Part Number: 2015-051
Printed (4-09)

Table of Contents

1. **Cab (R.O.P.S.) Assembly**
   Serial # RSF 00101-Current* **1-A**

2. **Enclosed Cab (R.O.P.S.) Assembly**
   (Optional)Serial # RSF 00101-Current* **2-A**

3. **Instrument Panel Assembly**
   Serial # RSF 00101-Current* **3-A**

4. **Chassis Assembly**
   Serial # RSF 00101-555 . . . . . **4-A**
   Serial # RSF 00556-Current* **4-B**

5. **Hood Assembly**
   Serial # RSF 00101-Current* **5-A**

6. **Radiator/Oil Cooler Assembly**
   Serial # RSF 00101-965 . . . . . **6-A**
   Serial # RSF 00966-Current* **6-B**

7. **Hydraulic Reservoir Assembly**
   Serial # RSF 00101-Current* **7-A**

8. **Hydraulic Control Assembly**
   Serial # RSF 00101-Current* **8-A**

9. **Lift Arm Control Valve Assembly**
   Serial # RSF 00101-930 . . . . . **9-A**
   Serial # RSF 00931-Current* **9-B**

10. **Drive/Auxiliary Pump Assembly**
    Serial # RSF 00101-Current* **10-A**

11. **Pilot Generation Block**
    Serial # RSF 00101-Current* **11-A**

12. **Engine Assembly**
    Serial # RSF 00101-Current* **12-A**

13. **Intake/Exhaust Assemblies**
    Serial # RSF 00101-Current* **13-A**

14. **Battery Assembly**
    Serial # RSF 00101-Current* **14-A**

15. **Fuse Panel Assembly**
    Serial # RSF 00101-Current* **15-A**

16. **Torsion Axle Assembly**
    Serial # RSF 00101-Current* **16-A**

17. **Track Installation Tool**
    (Tool) Serial # RSF 00101-Current* **17-A**

18. **Undercarriage Assembly (RT)**
    Serial # RSF 00101-Current* **18-A**

19. **Undercarriage Assembly (LT)**
    Serial # RSF 00101-Current* **19-A**

20. **Drive Table Assembly (RT)**
    Serial # RSF 00101-Current* **20-A**

21. **Drive Table Assembly (LT)**
    Serial # RSF 00101-Current* **21-A**

22. **10” Wheel Assembly**
    Serial # RSF 00101-Current* **22-A**

23. **14” Wheel Assembly**
    Serial # RSF 00101-Current* **23-A**

24. **Lift Arm Assembly**
    Serial # RSF 00101-Current* **24-A**

25. **Lift Arm Tubes and Fittings**
    Serial # RSF 00101-Current* **25-A**

26. **Quick Attach Assembly**
    Serial # RSF 00101-829 . . . . . **26-A**
    Serial # RSF 00830-Current* **26-B**

27. **Air Conditioning Assemblies**
    (Optional) Serial # RSF 00101-Current* **27-A**

* Current refers to the machines being produced at the time this manual was printed. See manual cover for print date.

GENERAL SERVICE ITEMS & LUBRICANTS

ITEM	MANUFACTURER/DESCRIPTION	ASV P/N
-Engine Oil Filter	Perkins (2654407)	0201-859
-Primary Air Filter	Donaldson (P828889)	0201-510
-Secondary Air Filter	Donaldson (P829333)	0201-533
-Diesel Fuel Filter	Perkins (26560201)	0201-857
-Fuel/Water Separator	Perkins (26550005)	0201-858
-Antifreeze/Coolant (1 gal.)	Ethylene Glycol (long life)	0300-766
-Antifreeze/Coolant (Case/6 gal.)	Ethylene Glycol (long life)	0402-841
-Engine Oil (1 qt.)	Multi-Grade 10W-30	0300-767
-Engine Oil (Case/12 qt.)	Multi-Grade 10W-30	0402-838
-Engine Oil (1 gal.)	Multi-Grade 10W-30	0402-839
-Engine Oil (Case/6 gal.)	Multi-Grade 10W-30	0402-840
-Grease (1 Tube)	Multi-Purpose Lithium	0300-769
-Grease (Box/10 Tubes)	Multi-Purpose Lithium	0402-844
-Grease (Case/40 Tubes)	Multi-Purpose Lithium	0402-834
-Wheel Lube (8 oz. Bottle)	Undercarriage Wheel Bearing Lube	0402-842
-Wheel Lube (Case/10 Bottles)	Undercarriage Wheel Bearing Lube	0402-843

HYDRAULIC SERVICE ITEMS & LUBRICANTS

ITEM	DESCRIPTION	ASV P/N
-Auxilliary Hydraulic Oil Filter	ASV hyd. filter	0307-921
-High Flow Hydraulic Oil Filter	ASV Hyd. filter	0307-921
-Case Drain Oil FIlter	Lenz (CP-752-10)	0302-853
-Hydraulic Oil (5 gal.)	All Season MV	0400-253
-Hydraulic Oil (55 gal.)	All Season MV	0402-833

O-RING	ASV P/N
-# 4, Flat Face Type	2055-196
-# 6, Flat Face Type	0310-285
-# 8, Flat Face Type	0310-286
-# 10, Flat Face Type	0310-287
-# 12, Flat Face Type	0310-288
-# 16, Flat Face Type	0310-289
-# 20, Flat Face Type	0310-290
-# 24, Flat Face Type	0201-479
-# 4, ORB Type	0314-366
-# 6, ORB Type	0310-619
-# 8, ORB Type	0307-353
-# 10, ORB Type	0310-620
-# 12, ORB Type	0310-621
-# 16, ORB Type	0307-354
-# 20, ORB Type	0310-832

CYLINDER SERVICE ITEMS

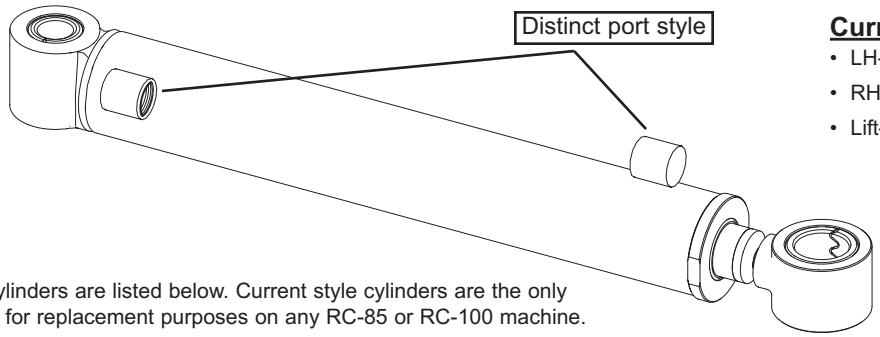

Current Cylinders

- LH-Bucket/Tilt P/N: 0201-968
- RH-Bucket/Tilt P/N: 0201-969
- Lift-Arm P/N: 0201-972

Notes:

Parts for current cylinders are listed below. Current style cylinders are the only cylinders available for replacement purposes on any RC-85 or RC-100 machine.

ITEM	MANUFACTURER/DESCRIPTION	ASV P/N
-Kit,Seal,Bucket/Tilt Cylinder	FIts Cylinder (P/N:0201-968/969)	0003-059
-Rod,Bucket/Tilt Cylinder	FIts Cylinder (P/N:0201-968)	0003-057
-Rod,Bucket/Tilt Cylinder	FIts Cylinder (P/N:0201-969)	0003-061
-End Gland,Bucket/Tilt Cylinder	FIts Cylinder (P/N:0201-968/969)	0003-058
-Nut,Bucket/Tilt Cylinder	FIts Cylinder (P/N:0201-968/969)	0003-037
-Kit,Seal,Lift Arm Cylinder	FIts Cylinder (P/N:0201-972)	0003-062
-End Gland,Lift Arm Cylinder	FIts Cylinder (P/N:0201-972)	0003-066
-Rod,Lift Arm Cylinder	FIts Cylinder (P/N:0201-972)	0003-078
-Nut,Lift Arm Cylinder	FIts Cylinder (P/N:0201-972)	0003-037

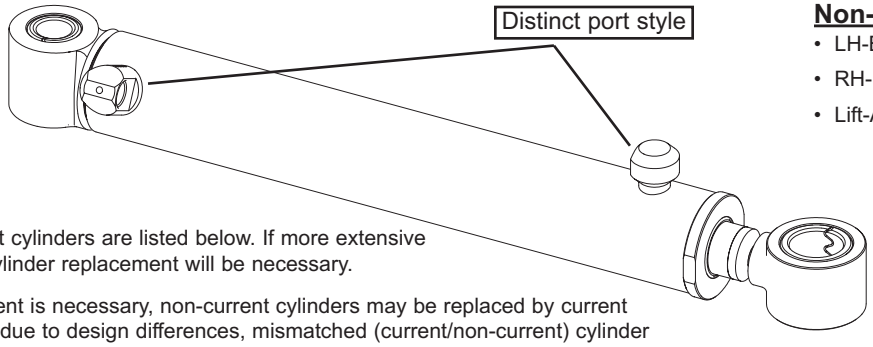

Non-current Cylinders

- LH-Bucket/Tilt P/N: 0201-238
- RH-Bucket/Tilt P/N: 0201-239
- Lift-Arm P/N: 0201-237

Notes:

Parts for non-current cylinders are listed below. If more extensive repair is required, cylinder replacement will be necessary.

If cylinder replacement is necessary, non-current cylinders may be replaced by current cylinders. However, due to design differences, mismatched (current/non-current) cylinder pairs will not function properly together. Non-current cylinders must be replaced in pairs.

ITEM	MANUFACTURER/DESCRIPTION	ASV P/N
-Kit,Seal,Bucket/Tilt Cylinder	FIts Cylinder (P/N:0201-238/239)	0201-662
-Rod,Bucket/Tilt Cylinder	FIts Cylinder (P/N:0201-238/239)	0081-010
-End Gland,Bucket/Tilt Cylinder	FIts Cylinder (P/N:0201-238/239)	0201-817
-Nut,Bucket/Tilt Cylinder	FIts Cylinder (P/N:0201-238/239)	0003-037
-Kit,Seal,Lift Arm Cylinder	FIts Cylinder (P/N:0201-237)	0201-663
-End Gland,Lift Arm Cylinder	FIts Cylinder (P/N:0201-237)	0201-818
-Rod,Lift Arm Cylinder	FIts Cylinder (P/N:0201-237)	0081-013
-Nut,Lift Arm Cylinder	FIts Cylinder (P/N:0201-237)	0003-037

CATERPILLAR ENGINE SERVICE ITEMS

(Machine Serial #: RSF 00101-485)

ITEM	MANUFACTURER/DESCRIPTION	ASV P/N
Engine Oil Filter	Caterpillar (7W-2326)	0310-090
Primary Air Filter	Donaldson (P828889)	0201-510
Secondary Air Filter	Donaldson (P829333)	0201-533
Engine Fuel Filter	Caterpillar (1R-1804)	0201-509
Fan Belt	Gates	0201-645
Fuel/Water Separator	Caterpillar (138-3100)	0310-088

CAB ASSEMBLY (R.O.P.S. CANOPY) (Serial #: RSF 00101-Current)

REF. NO.	PART NUMBER	QTY.	DESCRIPTION
1	0304-318	1	BOX,OWNERS MANUAL
2	0304-320	1	DECAL,OWNER'S MANUAL
3	0304-306	1	DECAL,WARNING,LOAD
4	0310-169	1	FILM-DANGER (LOADER) (REACHING
5	8040-486	5	NUT,HEX,NYLOCK,3/8-16 UNC,ZN
6	0201-912	1	WLMT,LEVER,THROTTLE
7	0302-546	1	KNOB,PLASTIC,1-7/8 DIA,1/2-13
8	0201-265	1	DECAL,WARNING,FIRE HAZARD
9	8102-227	2	CAPSCREW,HH,3/8-16UNCx2.0 GD8
10	0304-276	1	WLMT,LEVER,THROTTLE
11	0304-496	1	PAD,SKID
12	0303-099	2	WASHER,STAR,3/8,INT/EXT TOOTH
13	0303-071	2	WASHER,NYLON,BLACK,1" OD
14	0304-305	1	DECAL,THROTTLE
15	0310-122	1	FILM-WARNING (MOUNT) (DISMOUNT
16	0310-143	1	FILM-WARNING,RIDERS
17	0201-251	1	ROPS,FOPS,RC100
18	8051-242	4	WASHER,SPRING LOCK,5/16,ZN
19	8050-222	6	WASHER,WROUGHT,1/4,STD,ZN
20	8102-132	4	CAPSCREW,HH,5/16-18UNCx1.0 GD8
21	0200-321	2	PAD,RUBBER,W/ADHESIVE
22	0200-320	2	WLMT,STOP LAP BAR
23	8050-240	4	WASHER,STAINLESS,1/4",MS
24	8051-212	4	WASHER,SPRING LOCK,1/4,ZN
25	8102-044	4	CAPSCREW,HH,1/4-20UNCx1.25,GD8
26	8102-047	2	CAPSCREW,HH,1/4-20 UNCx2.0,GD8
27	8040-366	1	NUT,HEX,NYLOCK,1/4-20 UNC,ZN
28	0201-482	2	PIN,1.00x2.88
29	8102-224	4	CAPSCREW,HH,3/8-16UNCx1.25,GD8
30	0201-466	1	ASSY,SEATBELT,3.00"
31	0201-275	1	SPRING,GAS
32	8102-316	2	CAPSCREW,HH,7/16-14UNCx1.75GD8
33	0201-312	1	SEAT,W/O BELTS
34	8102-235	1	CAPSCREW,HH,3/8-16UNCx4.5,GD8,
35	0201-505	1	WLMT,PROP ROD
36	0201-477	1	PIN,LOCKING,D-RING,3.00"
37	0201-513	1	CAP,VINYL
38	0304-019	1	ASSY,LAP BAR
39	0304-471	1	SPRING,GAS,ASSIST
40	0304-473	1	SENSOR,SWITCH,LAPBAR

REF. NO.	PART NUMBER	QTY.	DESCRIPTION
41	0304-662	1	HARNESS,SWITCH,SEAT
42	0201-903	1	SPRING,1.75X0.48
43	8050-282	9	WASHER,WROUGHT,3/8,STD,ZN
44	0201-867	1	BUSHING
45	0201-866	1	BRACKET,L,THROTTLE
46	0201-902	1	CLEVIS,1/4-28,W/PIN
47	0201-925	1	WLMT,PEDAL,THROTTLE
48	0201-865	1	BUSHING,FOOT PEDAL
49	0200-526	1	STEP,FORMED,ROPS
50	0201-656	1	FOAM,ADHESIVE,8.3'
51	8040-546	2	NUT,HEX,NYLOCK,7/16-14 UNC,ZN
52	0300-529	1	JOINT,BALL,CABLE,CONTROL
53	0300-546	1	CABLE,GROUND
54	0301-121	2	NUT,JAM,1/4-28 UNF
55	0302-965	1	WASHER,RIVET,#7
56	8050-262	6	WASHER,WROUGHT,5/16,STD,ZN
57	8051-272	4	WASHER,SPRING LOCK,3/8,ZN
58	8102-222	4	CAPSCREW,HH,3/8-16 UNCx1.0,GD8
59	0302-952	1	WASHER,FENDER,5/16 ID x 1 1/2
60	8040-396	2	NUT,HEX,NYLOCK,1/4-28 UNF,ZN
61	8102-225	2	CAPSCREW,HH,3/8-16 UNCx1.5,GD8
62	0201-910	1	ROD,THREADED,1/4-28x5.75
63	0201-253	1	HARNESS,WIRING,FRONT
64	0201-564	2	COVER,CONSOLE
65	8041-500	1	NUT,HEX,NYLOCK,3/8-16UNC,THIN
66	8040-426	6	NUT,HEX,NYLOCK,5/16-18 UNC,ZN
67	2010-127	1	SWITCH,SEAT
68	0304-400	4	CLIP,FASTENER
69	0304-602	1	CAPSCREW,FH,WIZLOC,3/8-16X1.75
70	0304-501	1	TUBING, SPACER
71	0301-307	4	SCREW,MACHINE,4-40x.50
72	0310-308	4	NUT,HEX,NYLOCK 4-40
73	0412-036	1	BRACKET LAP BAR ACTIVATION SWITCH
	Service Items		
	0285-004	1	KIT,PINS,CONNECTOR,ROUND (repair kit for item 63 conn.)

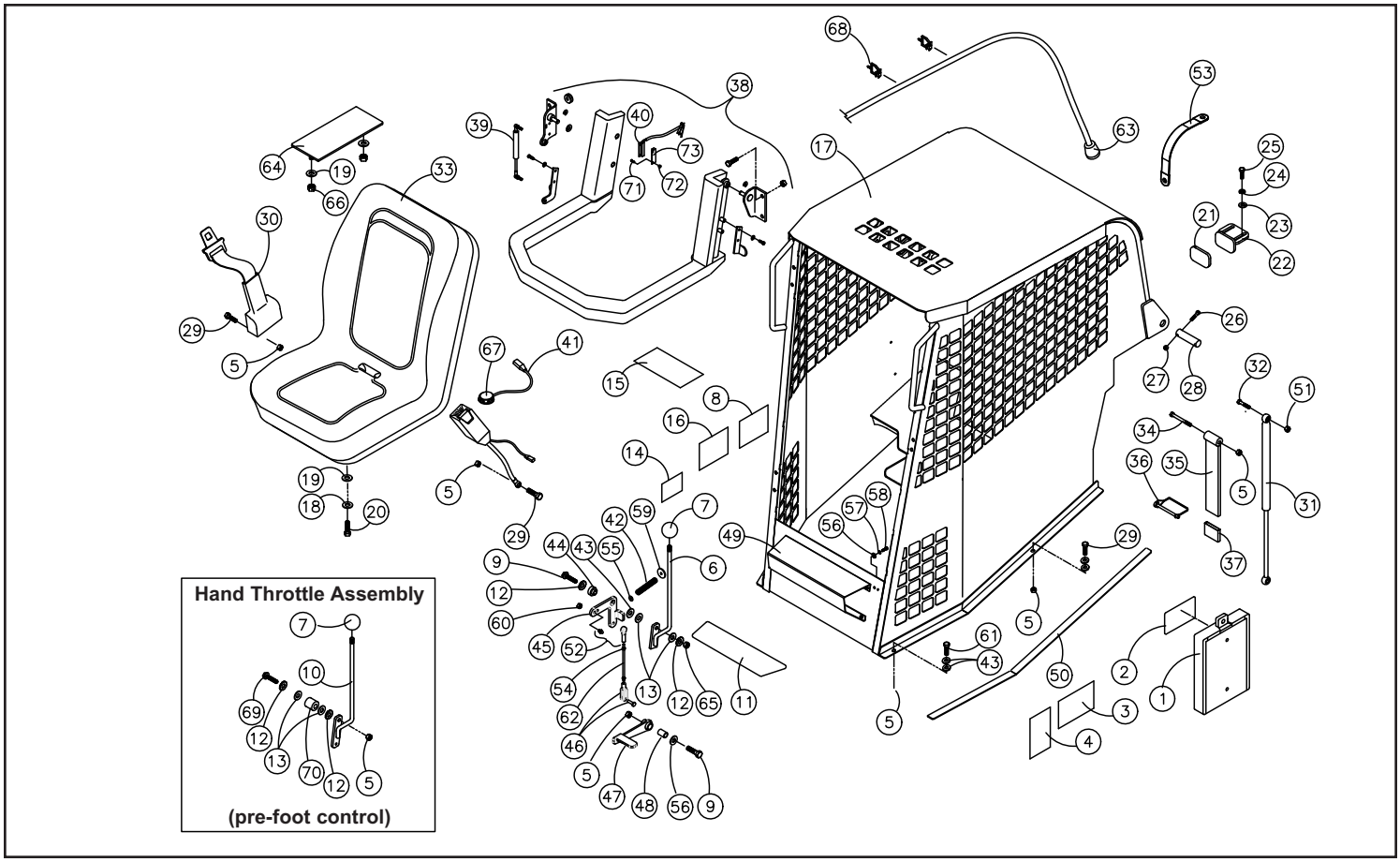

ENCLOSED CAB ASSEMBLY (Serial #: RSF 00101-Current)

REF. NO.	PART NUMBER	QTY.	DESCRIPTION
1	0402-760	1	GLASS,UPPER,RH
2	0402-769	1	GLASS,SLIDER,SINGLE,RH
3	0402-762	1	GLASS,LOWER,RH
4	0402-878	2	WLMT.HINGE,DOOR,RH
5	0314-208	2	BUSHING,HINGE
6	8102-136	6	CAPSCREW,HH,5/16-18x1.75 ZN GD
7	8040-426	8	NUT,HEX,NYLOCK,5/16-18 UNC,ZN
8	0304-619	1	MOTOR,WIPER,85^
9	0310-495	---	STRIP,LOCK (17 FT TOTAL (SEE NOTE)
10	0304-674	1	SEAL,WINDOW,10FT
11	0402-243	1	ARM,WIPER,15-19"
12	0304-557	1	BLADE,WIPER,FLAT,14"
13	0402-881	1	WINDOW,DOOR,RC,LH,RH
14	8102-040	7	CAPSCREW,HH,1/4-20 UNCx.75,GD8
15	8050-222	3	WASHER,WROUGHT,1/4,STD,ZN
16	8040-366	3	NUT,HEX,NYLOCK,1/4-20 UNC,ZN
17	0304-495	2	STUD,BALL,10MM
18	0304-484	---	TRIM,CAB RC-30 (10 FT)
19	0304-491	1	MNT,SHOCK
20	0402-932	1	BRACKET,SWITCH
21	0402-889	1	WLMT,DOOR,W/HINGES
22	0304-483	1	HANDLE,CAB
23	0304-485	2	SCREW,MACH,10-24x3/4,STAINLESS
24	8040-246	6	NUT,HEX,NYLOCK,10-24 UNC,ZN
25	0402-883	1	LOCK,CAB,W/INSIDE HANDLE
26	0304-381	6	SCREW,MACH,PH PAN HD 10-24X0.5
27	0301-609	2	NUT,LOCK,STAR WASHER,#10-24NC
28	0304-816	1	KEY,DOOR
29	0304-574	1	HARNESS,DOOR
30	0304-488	1	PLATE,STRIKER
31	0304-573	1	HARNESS,WIPER,B
32	0304-489	1	SPRING,GAS
33	0310-587	2	CLAMP,WIRE,3/8,ADHESIVE
34	0304-391	4	NUT,HEX,NYLOK1/4-20,INSERT/CAP
35	0304-646	1	PLATE,TOP
36	0301-033	8	WASHER,FENDER,1/4 x 1 1/4,STL,
37	0201-251	1	ROPS,FOPS,RC100
38	0201-748	2	ASSY,TAG,EMERGENCY EXIT
39	0402-826	24	KIT,RETAINER,WINDOW
40	1059-015	---	SEAL,WINDOW (7 FT)

REF. NO.	PART NUMBER	QTY.	DESCRIPTION
41	0201-252	1	WINDOW,REAR
42	0402-758	1	GLASS,SLIDER,SINGLE,LH
43	0402-761	1	GLASS,UPPER,LH
44	0402-763	1	GLASS,LOWER,LH
45	8040-546	1	NUT,HEX,NYLOCK,7/16-14 UNC,ZN
46	0201-275	2	SPRING,GAS
47	0201-868	1	SPACER,TUBING,1/2
48	8102-320	1	CAPSCREW,7/16-14UNCx2.75GD8
49	0200-545	2	CLIP,SAFETY,GAS SPRING
50	0301-637	16	GROMMET SIDE WINDOW
51	0403-010	2	LATCH SLIDER WINDOW
52	0304-480	2	WLMT,HINGE,DOOR
53	0304-512	1	MNT,SENSOR,LOADER
54	8102-143	2	CAPSCREW,HH,5/16-18UNC3.5,GD8
55	0402-620	1	ASSY,WLMT,DOOR
56	0304-482	16	LOCK,CAB

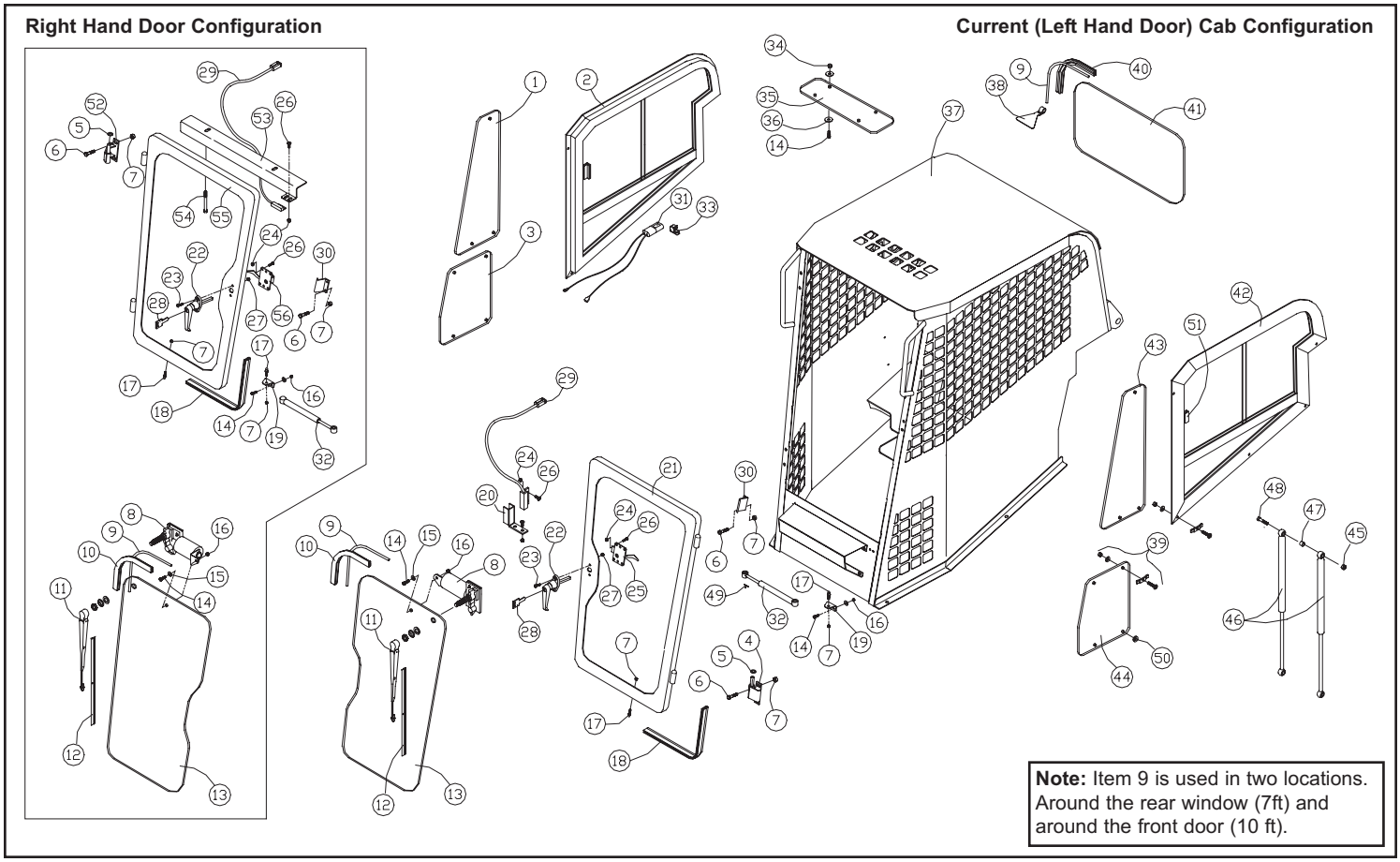

Note: Item 9 is used in two locations. Around the rear window (7ft) and around the front door (10 ft).

INSTRUMENT PANEL (Serial #: RSF 00101-Current)

REF. NO.	PART NUMBER	QTY.	DESCRIPTION
1	0201-812	1	CONSOLE,MACHINED,RC85/RC100
2	0201-921	1	LIGHT,DOME,2 WIRE
3	0310-713	3	GASKET, SWITCH
4	0310-126	1	SWITCH,LIGHT
5	0310-138	1	PLUG
6	8009-220	2	SCREW,MACH,PH,6-32x.75
7	0200-254	1	GAUGE,LEVEL
8	0304-430	1	PLATE,MNT
9	0304-022	1	GAUGE,CONSOLE
10	0200-252	2	SWITCH,3 POSITION,LOCKING
11	0304-551	1	RING,KEY
12	2045-432	1	KEY,IGNITION
13	8053-335	1	WASHER,STAR,INTERNAL,TOOTH,1"
14	0304-028	1	SWITCH,IGNITION,RC
15	8053-334	2	WASHER,STAR,INTERNAL,TOOTH,3/4
16	0201-481	1	SWITCH,PUSH BUTTON
17	0201-426	1	DECAL,SWITCH PANEL,LH
18	0201-423	1	DECAL,INSTRUCTION,DASH
19	0201-425	1	DECAL,SWITCH PANEL,RH
20	0201-427	1	DECAL,SWITCH,IGNITION
21	0304-650	1	HARNESS,GAUGE
22	0201-952	2	SPACER .625OD, .38 ID x 2 5/16"
23	8051-242	2	WASHER,SPRING LOCK,5/16,ZN
24	8102-142	2	CAPSCREW,HH,5/16-18x3.25,GD8
25	0201-595	2	HARNESS,LIGHT,DOUBLE
26	0304-411	1	PLUG, HOLE, 3/4", PLASTIC
27	2045-756	4	LIGHT 35W W/GROMMET
28	2045-755	2	KIT LIGHTS 35W W/ HARNESS

Note: There are 4 diodes located in the wiring harness that connects to the instrument panel. (ASV P/N: 0310-810)

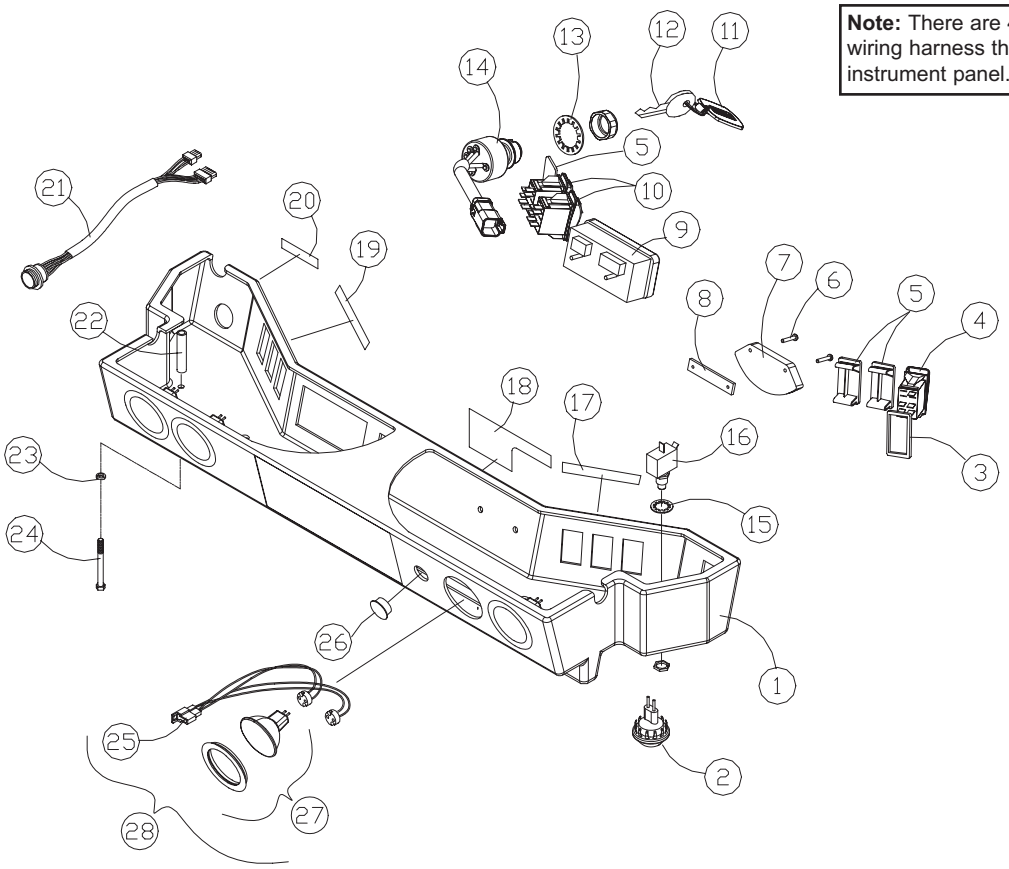

CHASSIS ASSEMBLY (Serial #: RSF 00101-554)

REF. NO.	PART NUMBER	QTY.	DESCRIPTION
1	0201-066	2	PLATE,BOLT
2	0201-483	4	BOLT,PLOW,1/2-13x2.00"
3	0201-167	1	WLMT,CHASSIS
4	8102-222	24	CAPSCREW,HH,3/8-16 UNCx1.0,GD8
5	0300-980	26	WASHER,1.447 x .406 x .125
6	8040-486	6	NUT,HEX,NYLOCK,3/8-16 UNC,ZN
7	0201-163	2	WLMT,MNT,JOYSTICK
8	0201-667	1	CAP,RESERVOIR,5PSI
9	0201-493	2	ADAPTER,4601-08-06-NWO
10	0201-494	1	ADAPTER,4604-06-06-0
11	2045-407	1	CAP,FUEL,GREEN,W/ASV LOGO
12	0201-583	2	HOSE,FUEL,.5,7"
13	0201-144	1	WLMT,TANK,FUEL,RH
14	0201-444	1	ASSY,FUEL SENDING UNIT,RC100
15	0201-479	2	O-RING, 24 ORFF
16	0301-396	2	PLUG,O-RING,#6,HH
17	0201-143	1	WLMT,TANK,FUEL,LH
18	0201-478	1	TUBE,CROSSOVER,FUEL
19	8102-224	20	CAPSCREW,HH,3/8-16UNCx1.25,GD8
20	0201-145	1	WEIGHT,REAR
21	8050-347	4	WASHER,WROUGHT,1/2,STD,ZN
22	8102-404	4	CAPSCREW,HH 1/2-13UNCx1.25 GD8
23	8051-332	4	WASHER,SPRING LOCK,1/2,ZN
24	8051-272	38	WASHER,SPRING LOCK,3/8,ZN
25	0201-417	1	SCREEN,REAR
26	8050-222	9	WASHER,WROUGHT,1/4,STD,ZN
27	8051-212	9	WASHER,SPRING LOCK,1/4,ZN
28	8102-040	9	CAPSCREW,HH,1/4-20 UNCx.75,GD8
29	0201-230	1	PLATE,SKID,BACK
30	0201-229	1	PLATE,SKID,MIDDLE
31	0201-228	1	PLATE,SKID,FRONT
32	8040-606	4	NUT,HEX,NYLOCK,1/2-13 UNC,ZN
33	0201-219	1	PAN,FLOOR
34	0201-523	1	MAT,FLOOR
35	0201-559	1	COVER,PEDESTAL,RH
36	0201-560	1	COVER,PEDESTAL,LH
37	0201-517	1	WLMT,SCREEN,TOP,REAR
38	0201-464	1	COVER,FLOOR
39	0201-175	1	RING,TIE DOWN
40	0200-010	1	HEAD,FILLER
41	0201-437	1	DECAL,BLACK,RH
42	0201-438	1	DECAL,BLACK,LH
43	0300-733	1	GASKET,SENDING UNIT
44	0309-528	5	SCREW,MACH,#10x3/4,PH,PN,SS
45	0201-733	2	PLATE,SCREEN
46	0310-423	2	PLUG,STEEL,3.00"
47	0201-736	1	WLMT,SCREEN,REAR
48	0200-264	1	HOUSING,POWER SOURCE
49	8050-282	18	WASHER,WROUGHT,3/8,STD,ZN H

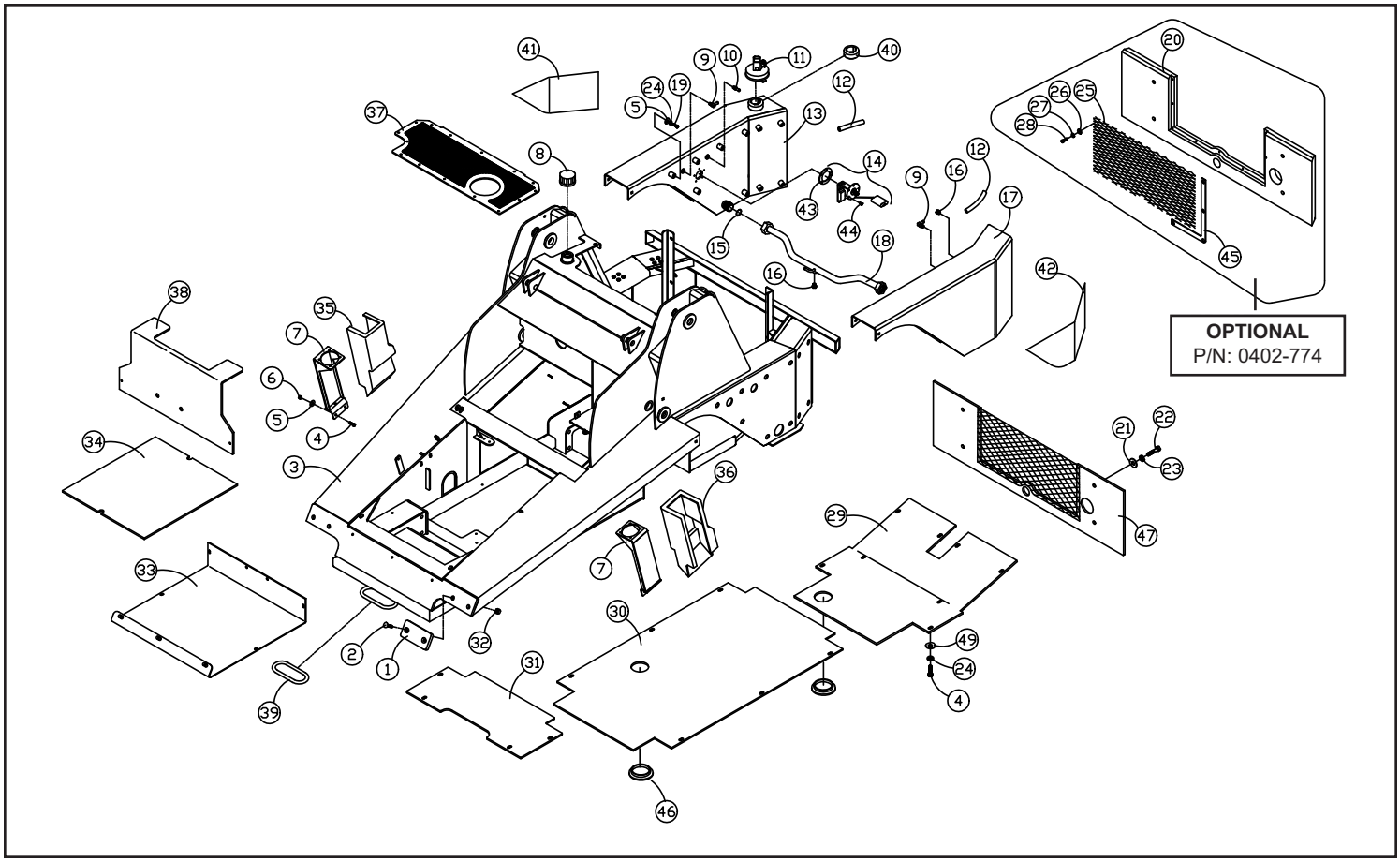

CHASSIS ASSEMBLY (Serial #: RSF 00555-Current)

REF. NO.	PART NUMBER	QTY.	DESCRIPTION
1	2055-203	2	STOP,LOADER
2	0201-483	4	BOLT,PLOW,1/2-13x2.00"
3	2040-010	1	WLMT,CHASSIS
4	8102-222	26	CAPSCREW,HH,3/8-16 UNCx1.0,GD8
5	0300-980	14	WASHER,1.447 x .406 x .125
6	8040-486	6	NUT,HEX,NYLOCK,3/8-16 UNC,ZN
7	0201-163	2	WLMT,MNT,JOYSTICK
8	0201-913	1	CAP,NON-VENTED W/LOCK
9	0201-493	2	ADAPTER,4601-08-06-NWO
10	0201-494	1	ADAPTER,4604-06-06-0
11	2045-407	1	CAP,FUEL,GREEN,W/ASV LOGO
12	0201-583	2	HOSE,FUEL,.5,7"
13	0201-846	1	WLMT,TANK,FUEL,RH
14	0201-444	1	ASSY,FUEL SENDING UNIT,RC100
15	0201-479	2	O-RING, 24 ORFF
16	0301-396	2	PLUG,O-RING,#6,HH
17	0201-842	1	WLMT,TANK,FUEL,LH
18	0201-478	1	TUBE,CROSSOVER,FUEL
19	8102-224	8	CAPSCREW,HH,3/8-16UNCx1.25,GD8
20	0201-145	1	WEIGHT,REAR
21	8050-347	20	WASHER,WROUGHT,1/2,STD,ZN
22	8102-404	4	CAPSCREW,HH 1/2-13UNCx1.25 GD8
23	8051-332	4	WASHER,SPRING LOCK,1/2,ZN
24	8051-272	28	WASHER,SPRING LOCK,3/8,ZN
25	0201-417	1	SCREEN,REAR
26	8050-222	9	WASHER,WROUGHT,1/4,STD,ZN
27	8051-212	9	WASHER,SPRING LOCK,1/4,ZN
28	8102-040	9	CAPSCREW,HH,1/4-20 UNCx.75,GD8
29	0201-230	1	PLATE,SKID,BACK
30	0201-229	1	PLATE,SKID,MIDDLE
31	0201-228	1	PLATE,SKID,FRONT
32	8040-606	4	NUT,HEX,NYLOCK,1/2-13 UNC,ZN
33	0201-219	1	PAN,FLOOR
34	0201-523	1	MAT,FLOOR
35	0201-559	1	COVER,PEDESTAL,RH
36	0201-560	1	COVER,PEDESTAL,LH
37	0201-517	1	WLMT,SCREEN,TOP,REAR
38	0201-464	1	COVER,FLOOR
39	0201-175	1	RING,TIE DOWN
40	0200-010	1	HEAD,FILLER
41	0310-423	2	PLUG,STEEL,3.00"
42	2040-046	1	GUARD,FUEL TANK,CAP,3"
43	0300-733	1	GASKET,SENDING UNIT
44	0309-528	5	SCREW,MACH,#10x3/4,PH,PN,SS
45	0201-733	2	PLATE,SCREEN
46	0201-376	1	HARNESS,WIRING,REAR
47	8050-282	20	WASHER,WROUGHT,3/8,SAE,ZN
48	8051-272	28	WASHER,SPRING LOCK,3/8,ZN
49	0310-139	2	FILM-DANGER (LOADER) (CRUSHER)
50	0201-664	2	DECAL,CLEAN,IMPORTANT
51	0300-407	2	DECAL,TRACK,WARNING
52	0304-188	2	PLUG,6 ORING,HH
53	0201-271	1	WLMT,CROSSMEMBER,RES.
54	8050-348	4	WASHER,1/2,SAE,ZN
55	0201-736	1	WLMT,SCREEN,REAR
56	2040-046	1	GUARD,FUEL TANK,CAP,3"
57	0200-264	1	HOUSING,POWER SOURCE

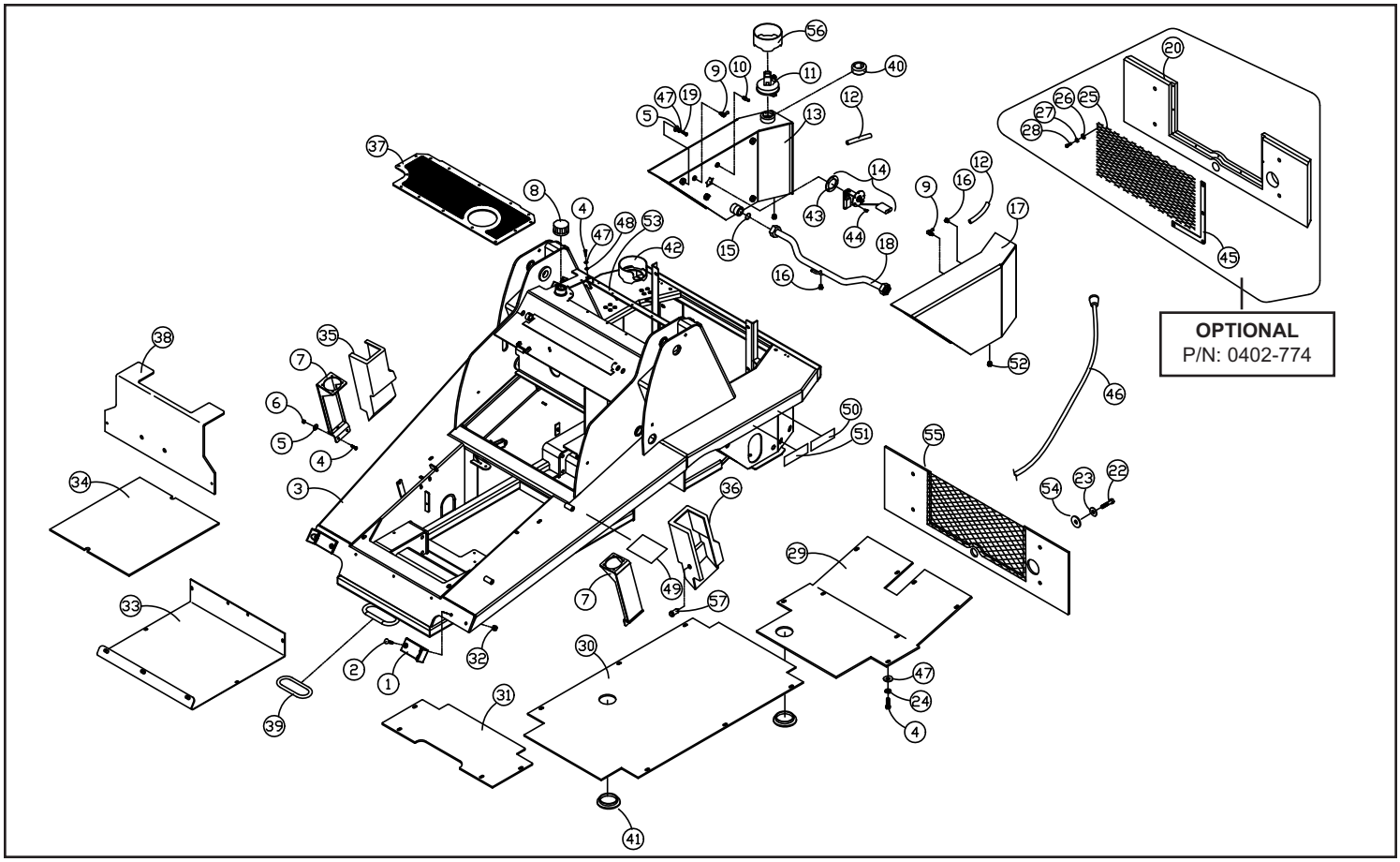

HOOD ASSEMBLY (Serial #: RSF 00101-Current)

REF. NO.	PART NUMBER	QTY.	DESCRIPTION
1	0200-141	1	DECAL,HOOD,SIDE,LH
2	0201-531	1	SCREEN,HOOD,TOP
3	0200-144	1	TRIM,SCREEN,TOP
4	1059-011	---	TRIM,SEAL,HOOD (12 FT)
5	0201-579	1	HOOD,RC100
6	8060-211	65	RIVET,BLIND,ALUM,0.125 x 0.75,
7	0309-062	1	SEAL,WEATHERSTRIP (4.5')
8	0201-503	1	WLMT,SCREEN,BACK
9	0302-042	2	LATCH,RUBBER,T-HANDLE
10	8060-688	4	RIVET,BLIND,3/16 x .375 ABA
11	0302-965	4	WASHER,RIVET,#7
12	0200-142	1	DECAL,SIDE,HOOD,RH
13	0200-148	2	TRIM,HOOD,SIDE
14	0201-529	1	WLMT,SCREEN,RH
15	0200-232	2	SPRING,GAS ASSIST
16	0310-641	2	MOUNT,SHOCK,90^
17	0200-289	2	WLMT,MNT,BRACKET,BALL STUD
18	8040-366	4	NUT,HEX,NYLOCK,1/4-20 UNC,ZN
19	8050-222	4	WASHER,WROUGHT,1/4,STD,ZN
20	0310-648	4	SCREW,MACH,1/4-20UNCx1.25
21	0310-640	2	HINGE,HOOD
22	8060-731	8	RIVET,STAINLESS,3/16x.575
23	8061-604	4	RIVET,ALUMINUM,3/16x.575
24	8050-262	2	WASHER,WROUGHT,5/16,STD,ZN
25	2045-756	2	LIGHT 35W W/GROMMET
26	0201-526	1	WLMT,SCREEN,LH
27	0201-594	2	HARNESS,LIGHT,SINGLE
28	8102-130	2	CAPSCREW,HH 5/16-18x3/4,GR8
29	8051-242	2	WASHER,SPRING LOCK,5/16,ZN
30	0201-907	1	TRIM,SCREEN,BACK,TOP
31	0201-908	2	TRIM,SCREEN,BACK,SIDE

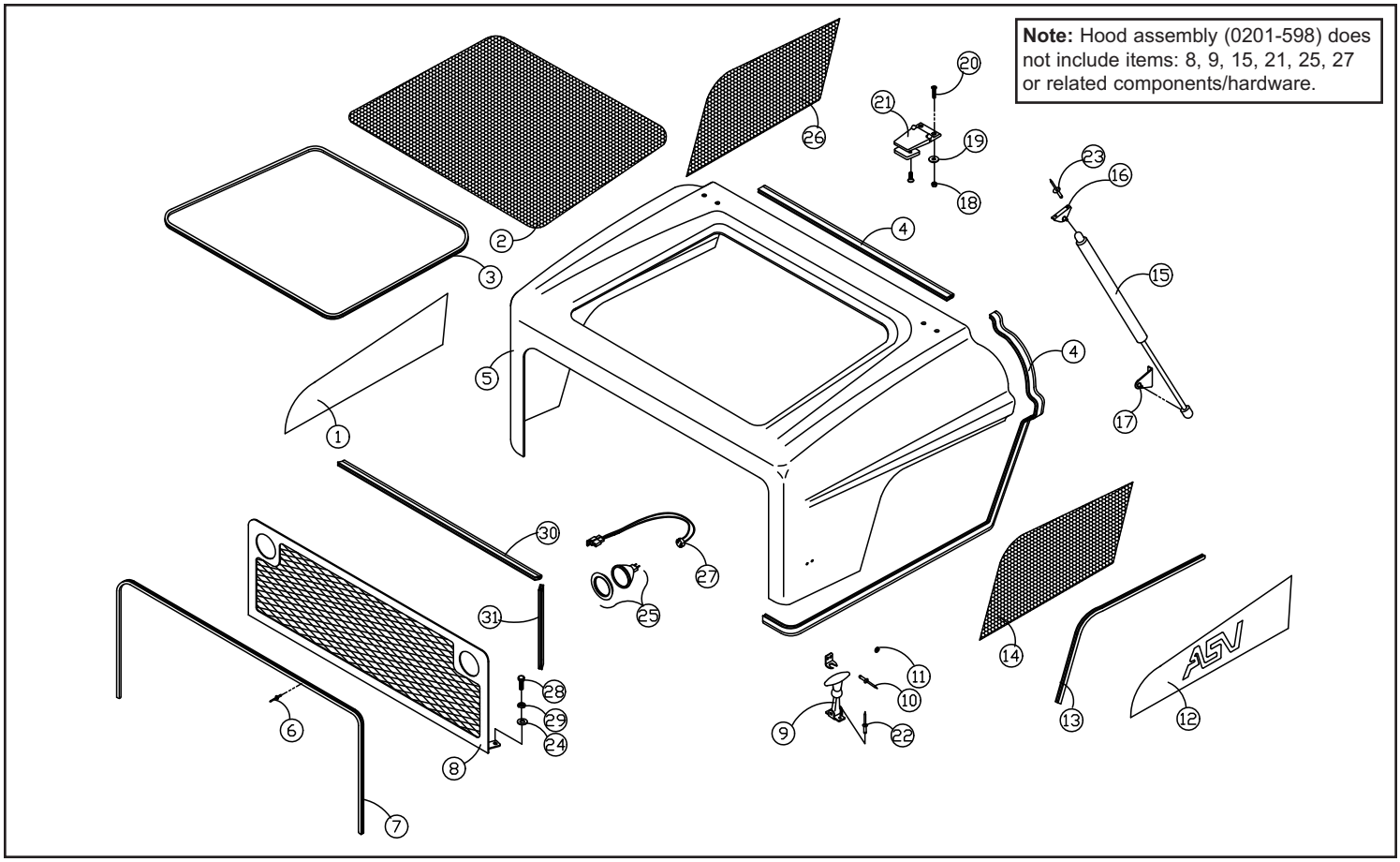

RADIATOR/OIL COOLER ASSEMBLY (Serial #: RSF 00101-965)

REF. NO.	PART NUMBER	QTY.	DESCRIPTION
1	0201-049	1	GUARD,FAN,LH
2	8102-044	5	CAPSCREW,HH,1/4-20UNCx1.25,GD8
3	8051-212	5	WASHER,SPRING LOCK,1/4,ZN
4	8050-222	5	WASHER,WROUGHT,1/4,STD,ZN
5	0201-727	1	FAN,24.00",BLOWER,GEN2
6	0201-156	2	BRKT,MNT,SHROUD
7	0201-048	1	WLMT,SHROUD
8	0201-383	1	HOSE,16G1,16”
9	0300-686	4	CLAMP,HOSE,2.0,#32
10	0201-373	1	HOSE,16G1,49.50"
11	0310-202	1	DECAL,WARNING,RADIATOR
12	0201-884	1	CAP,RADIATOR,13PSI
13	0201-050	1	GUARD,FAN,RH
14	0304-444	1	HOSE,7/16 x 5/16 POLY,3FT
15	0201-045	1	ASSY,COOLER
16	0310-312	2	ADAPTER,16MFFOR-16MB
17	0201-808	1	ASSY,RELIEF,TANK,0-3PSI
18	0201-365	1	HOSE,16G1,45"
19	0201-318	2	HOSE,RADIATOR
20	8102-222	16	CAPSCREW,HH,3/8-16 UNCx1.0,GD8
21	8050-277	16	WASHER,WROUGHT,3/8,SAE,ZN
22	0310-586	2	CLAMP,WIRE,3/8,W/.25 MTG
23	8102-040	4	CAPSCREW,HH,1/4-20 UNCx.75,GD8
24	0310-607	4	NUT,FAN
25	0201-463	1	COVER,SHROUD
26	0201-785	2	ASSY,RING,BRISTLE,SHROUD
27	0201-628	4	SPACER,CLAMP
28	0201-666	1	TRIM,BUBBLE

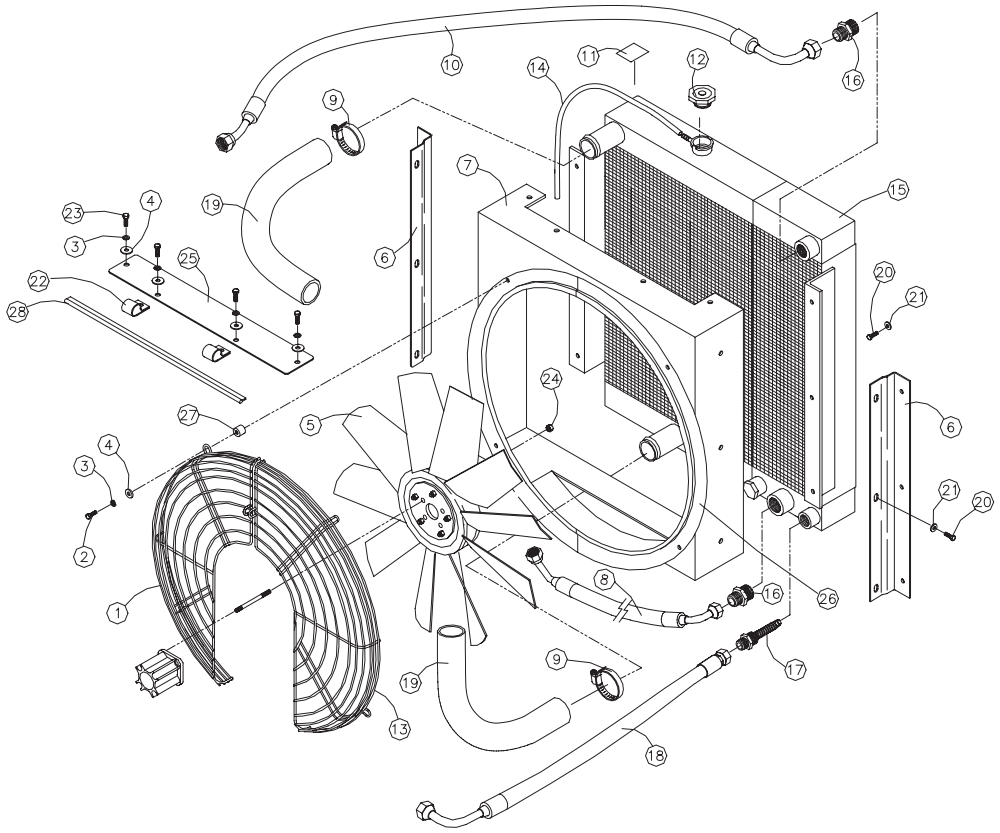

RADIATOR/OIL COOLER ASSEMBLY (Serial #: RSF 00966-Current)

REF. NO.	PART NUMBER	QTY.	DESCRIPTION
1	0201-953	1	GUARD FAN SHORT LH
2	8102-040	5	CAPSCREW,HH,1/4-20 UNCx.75,GD8
3	8051-212	5	WASHER,SPRING LOCK,1/4,ZN
4	8050-222	5	WASHER,WROUGHT,1/4,STD,ZN
5	0201-727	1	FAN,24.00",BLOWER,GEN2
6	0201-900	1	SHROUD PLASTIC
7	0310-607	4	NUT,FAN
8	0201-383	1	HOSE,16GI-16FFORX90M-16FFORX45
9	0300-686	4	CLAMP,HOSE,2.0,#32
10	0201-373	1	HOSE,16G1-16FFORX90L-16FFORX45
11	0310-202	1	DECAL,WARNING,RADIATOR
12	0201-884	1	CAP,RADIATOR,13PSI
13	0201-954	1	GUARD FAN SHORT RH
14	0304-444	1	HOSE,7/16 x 5/16 POLY,3FT
15	0201-045	1	ASSY,COOLER
16	0310-312	2	ADAPTER,16MFFOR-16MB
17	0201-154	1	RELIEF,TANK,O-RING,0-3 PSI
18	0201-365	1	HOSE,16G1-16FFORX-16FFORX90M-4
19	0201-318	2	HOSE,RADIATOR
20	8051-272	6	WASHER,SPRING LOCK,3/8,ZN
21	8102-222	6	CAPSCREW,HH,3/8-16 UNCx1.0,GD8
22	0300-980	6	WASHER,1.447 x .406 x .125
23	0201-785	2	RING,BRUSH

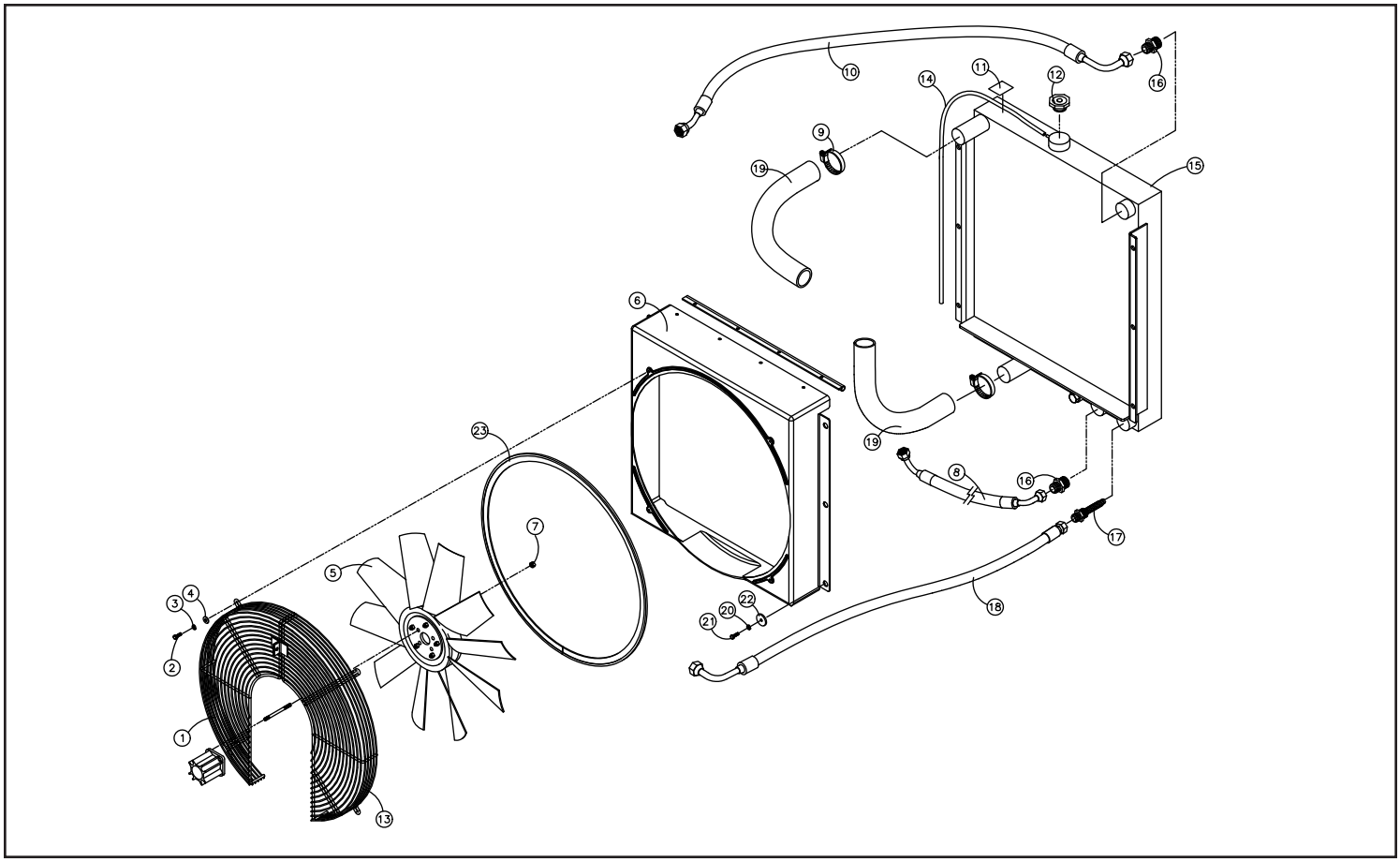

HYDRAULIC RESERVOIR ASSEMBLY (Serial #: RSF 00101-Current)

REF. NO.	PART NUMBER	QTY.	DESCRIPTION
1	0201-283	1	WLMT,RES,OIL,RC85/RC100
2	0302-853	1	ELEMENT,FILTER,SPIN-ON
3	0310-346	1	ADAPTER,8MFFOR-8MB-90^
4	0201-433	1	ASSY,FILTER,HYDRAULIC
5	8051-212	3	WASHER,SPRING LOCK,1/4,ZN
6	8102-042	3	CAPSCREW, HH 1/4-20UNC 1" GD8
7	0201-414	1	HOSE,8M4K-8FFORX-8FFORX45-91.5
8	0201-354	1	HOSE,8G1-8FFORX-8FFORX90S-24.2
9	0310-345	2	ADAPTER,8MFFOR--8MB
10	0303-175	2	HOSE,CLAMP,2.75,HI-TORQUE
11	0201-146	1	HOSE,FILLER,RESERVOIR
12	0201-352	2	HOSE,8M4K-8FFORX-8FFORX-24"
13	0201-353	2	HOSE,8M4K-8FFORX-8FFORX-45.50"
14	0201-103	1	TUBE,LOADER,LOWER
15	0201-102	1	TUBE,LOADER,UPPER
16	0201-413	4	HOSE,10M4K-10FFORX-10FFORX-29.
17	0201-412	2	HOSE,16G5K-16FFORX-16FFORX-50"
18	0201-403	2	HEAD,FILTER
19	0201-317	2	ADAPTER,FS6801-12-16-NW0
20	0310-343	2	ADAPTER,16MFFOR-16MB-90^
21	0201-496	8	CAPSCREW,FLHD,SOC,3/8-16UNCx1.
22	0201-117	1	TUBE,FILTER,CHARGE,COVER
23	0307-921	2	FILTER SPIN-ON HYD W/ ASV LOGO
24	0201-383	1	HOSE,16GI-16FFORX90M-16FFORX45
25	0201-118	1	TUBE,FILTER,CHARGE,UPPER
26	0201-115	1	TUBE,TEE,RETURN,VLV
27	0201-127	1	TUBE,PRESS,VLV
28	0201-098	1	TUBE,FLOW,LOW,UPPER
29	0201-100	1	TUBE,BUCKET,UPPER
30	0201-101	1	TUBE,BUCKET,LOWER
31	0201-105	1	TUBE,FLOW,HIGH,LOWER
32	0201-104	1	TUBE,FLOW,HIGH,UPPER
33	0201-099	1	TUBE,FLOW,LOW,LOWER
34	0201-397	1	GASKET,COVER,RESERVOIR
35	0201-396	1	COVER,RESERVOIR
36	0201-615	1	CAPSCREW,FLHD,SOC,3/8-16UNCX2.
37	0201-573	1	SPACER,TUBE,.75x.5x1
38	8040-486	2	NUT,HEX,NYLOCK,3/8-16 UNC,ZN
39	0201-616	1	SPACER,.75x.51x.25
40	8102-225	1	CAPSCREW,HH,3/8-16 UNCx1.5,GD8
41	0201-309	2	ADAPTER,FS6400-04-06-0
42	0310-329	1	ADAPTER,6MFFOR-6MB
43	0310-467	1	CLAMP,WIRE,1.0
44	0307-879	1	SWITCH,TEMP,OIL,225^
45	0310-345	1	ADAPTER,8MFFOR--8MB
46	0201-153	1	RELIEF,TANK,O-RING,80-100 PSI
47	0310-312	1	ADAPTER,16MFFOR-16MB
48	0201-494	1	ADAPTER,4604-06-06-0
49	0201-916	1	HOSE,BREATHER,3/8,8"
50	0300-732	3	CLAMP,HOSE,#4
51	0201-914	1	FILTER,FUEL,3/8",STEEL
52	0201-915	1	HOSE,BREATHER,3/8" x 11"
53	0304-642	1	GAUGE,SIGHT 5"
54	0201-226	3	CLAMP,SET,T4100-PP
55	0310-831	3	CLAMP, SET, T2062-PP
56	8102-134	3	CAPSCREW,HH,5/16-18UNCx1.25GD8
57	0201-622	1	TUBE,SL,BUCKET,CURL
58	0201-621	1	TUBE,SL,BUCKET,DUMP
59	0201-620	1	TUBE,SL,LOADER,DOWN
60	0310-318	3	ADAPTER,10MFFOR-10MB
61	0201-625	1	VALVE,SELF-LEVELING
62	0201-668	1	ADAPTER,FF6801-10-10NWO
63	0310-584	3	PLATE,COVER TCP-T2
64	0201-227	3	CLAMP,COVER,TCP-T4
65	8102-137	3	CAPSCREW,HH,5/16-18UNCx2.0 GD8
66	0201-151	1	SCREEN,SUCTION,2.5"
67	0201-224	4	COVER,CLAMP,COP-2
68	8102-045	8	CAPSCREW,HH,1/4-20x1.5"ZN GD8
69	0201-223	4	CLAMP,SET,2062-PP
70	0310-733	1	INSERT,CLAMP,TWIN.75" T3075-PP
71	0310-828	1	COVER, CLAMP, 3/4" TCP-T3
72	8102-136	1	CAPSCREW,HH,5/16-18x1.75 ZN GD
73	0201-360	1	HOSE,10G1-10FFORX90M-10FFORX90
74	0201-361	1	HOSE,10G1-10FFORX-10FFORX90M-3
75	0201-116	1	TUBE,RETURN,VLV

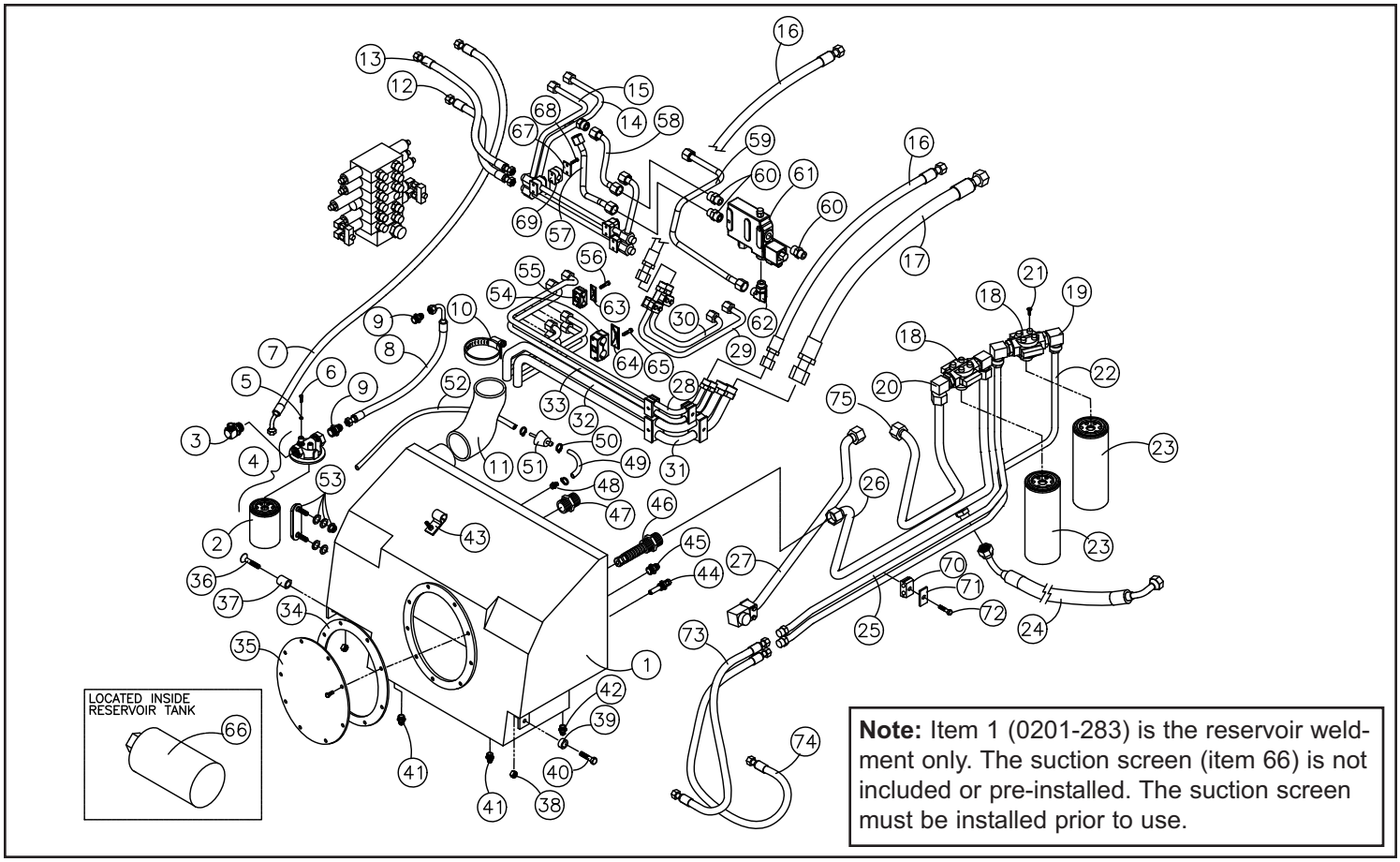

Note: Item 1 (0201-283) is the reservoir weldment only. The suction screen (item 66) is not included or pre-installed. The suction screen must be installed prior to use.

HYDRAULIC CONTROL ASSEMBLY (Serial #: RSF 00101-Current)

REF. NO.	PART NUMBER	QTY.	DESCRIPTION
1	0201-415	1	HOSE,6M4K-6FFORX-6FFORX-55.5"
2	0201-295	1	ASSY,LINE,FLOW,HIGH,FRONT
3	0201-294	1	ASSY,LINE,FLOW,LOW,FRONT
4	0201-292	1	ASSY,LINE,FLOW,LOW,REAR
5	0201-293	1	ASSY,LINE,FLOW,HIGH,REAR
6	0307-882	2	TIE,CABLE,BLACK,18.1",W/STL IN
7	0201-355	2	HOSE,4G1-4FFORX-4FFORX-59.50"
8	0201-287	1	ASSY,LINE,CONTROL,BUC-CRL
9	0201-289	1	ASSY,LINE,CONTROL,LDR-UP
10	0201-291	1	ASSY,LINE,CONTROL,BUC-DMP
11	0201-290	1	ASSY,LINE,CONTROL,LDR,DN
12	8040-396	8	NUT,HEX,NYLOCK,1/4-28 UNF,ZN
13	0201-309	12	ADAPTER,FS6400-04-06-0
14	0310-831	5	CLAMP, SET, T2062-PP
15	0304-395	2	CLAMP,PILOT LINES
16	0201-356	2	HOSE,4G1-4FFORX-4FFORX90S-33"
17	8104-040	8	CAPSCREW,HH 1/4-28UNFx .75 GD8
18	0201-263	1	ASSY,JOYSTICK,RH
19	0201-264	1	ASSY,JOYSTICK,LH
20	0201-296	1	ASSY,LINE,CONTROL,E
21	0201-297	1	ASSY,LINE,CONTROL,F
22	0201-362	2	HOSE,4G1-4FFORX-4FFORX90S-50.5
23	0201-363	2	HOSE,4G1-4FFORX-4FFORX90S-43"
24	0201-967	1	VALVE,LOADER
25	0201-152	2	GRIP,CONTROL
26	0201-775	1	BOOT,JOYSTICK,RH
27	0304-516	1	MAGNET,DETENT
28	0201-774	1	BOOT,JOYSTICK,LH
29	0304-441	1	SWITCH,PRESSURE
30	8102-134	5	CAPSCREW,HH,5/16-18UNCx1.25GD8
31	0310-584	5	PLATE,COVER TCP-T2
32	0201-323	1	RELAY,LATCHING

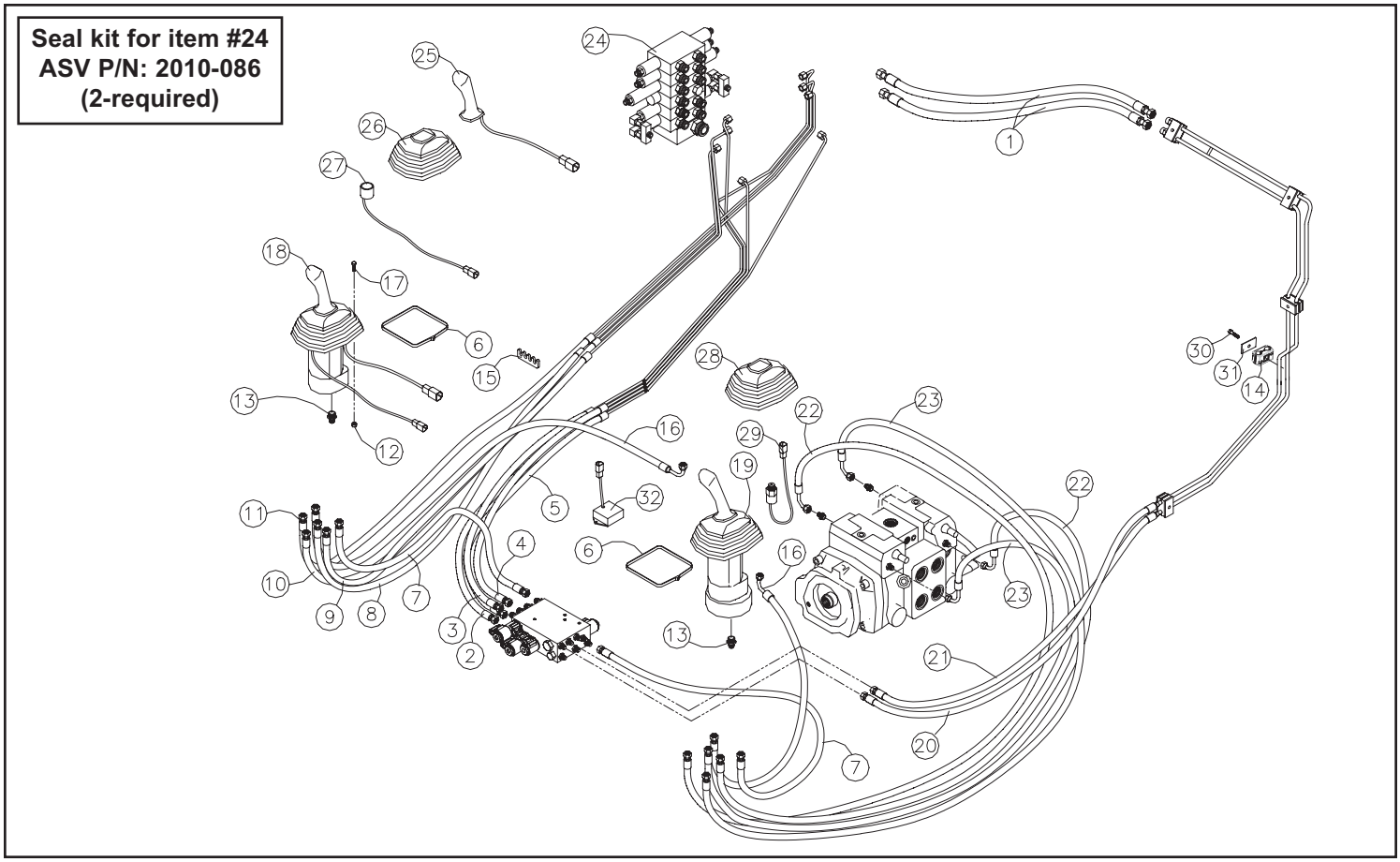

LIFT ARM CONTROL VALVE ASSEMBLY (Serial #: RSF 00101-930)

REF. NO.	PART NUMBER	QTY.	DESCRIPTION
1	0201-137	1	VALVE,LOADER
2	0201-309	6	ADAPTER,FS6400-04-06-0
3	0201-658	4	ADAPTER,10MFFOR-8MB-S
4	0201-319	4	ADAPTER,FS6801-04-06-NW0
5	0201-135	2	TEE,FLOW,HIGH
6	0310-312	2	ADAPTER,16MFFOR-16MB
7	0310-318	6	ADAPTER,10MFFOR-10MB
8	0310-992	1	ADAPTER,6MFFOR-8MB

REF. NO.	PART NUMBER	QTY.	DESCRIPTION

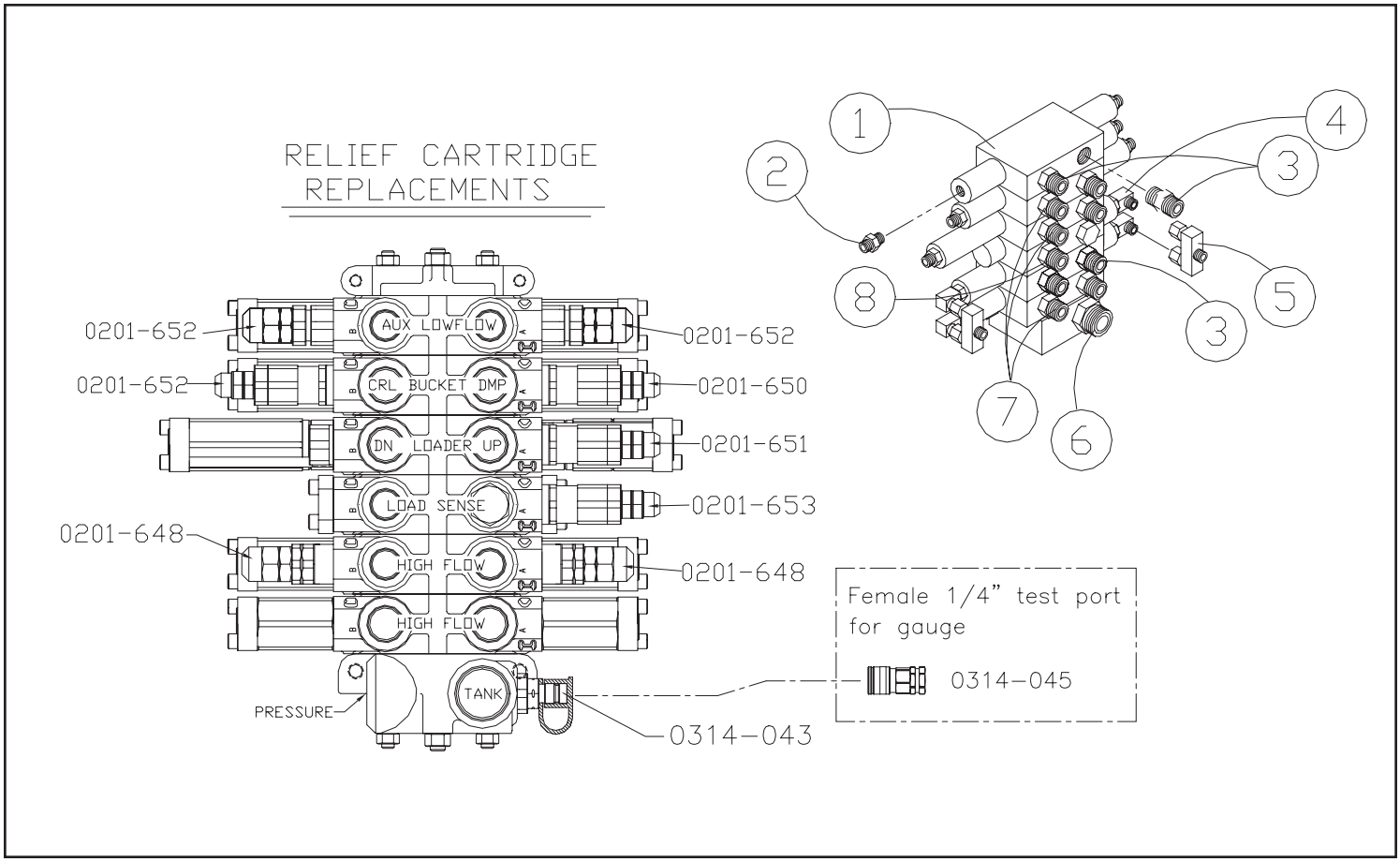

LIFT ARM CONTROL VALVE ASSEMBLY (Serial #: RSF 00931-Current)

REF. NO.	PART NUMBER	QTY.	DESCRIPTION
1	0201-967	1	VALVE,LOADER
2	0201-309	6	ADAPTER,FS6400-04-06-0
3	0201-658	4	ADAPTER,10MFFOR-8MB-S
4	0201-319	4	ADAPTER,FS6801-04-06-NW0
5	0201-135	2	TEE,FLOW,HIGH
6	0310-312	2	ADAPTER,16MFFOR-16MB
7	0310-318	6	ADAPTER,10MFFOR-10MB
8	0310-992	1	ADAPTER,6MFFOR-8MB

REF. NO.	PART NUMBER	QTY.	DESCRIPTION

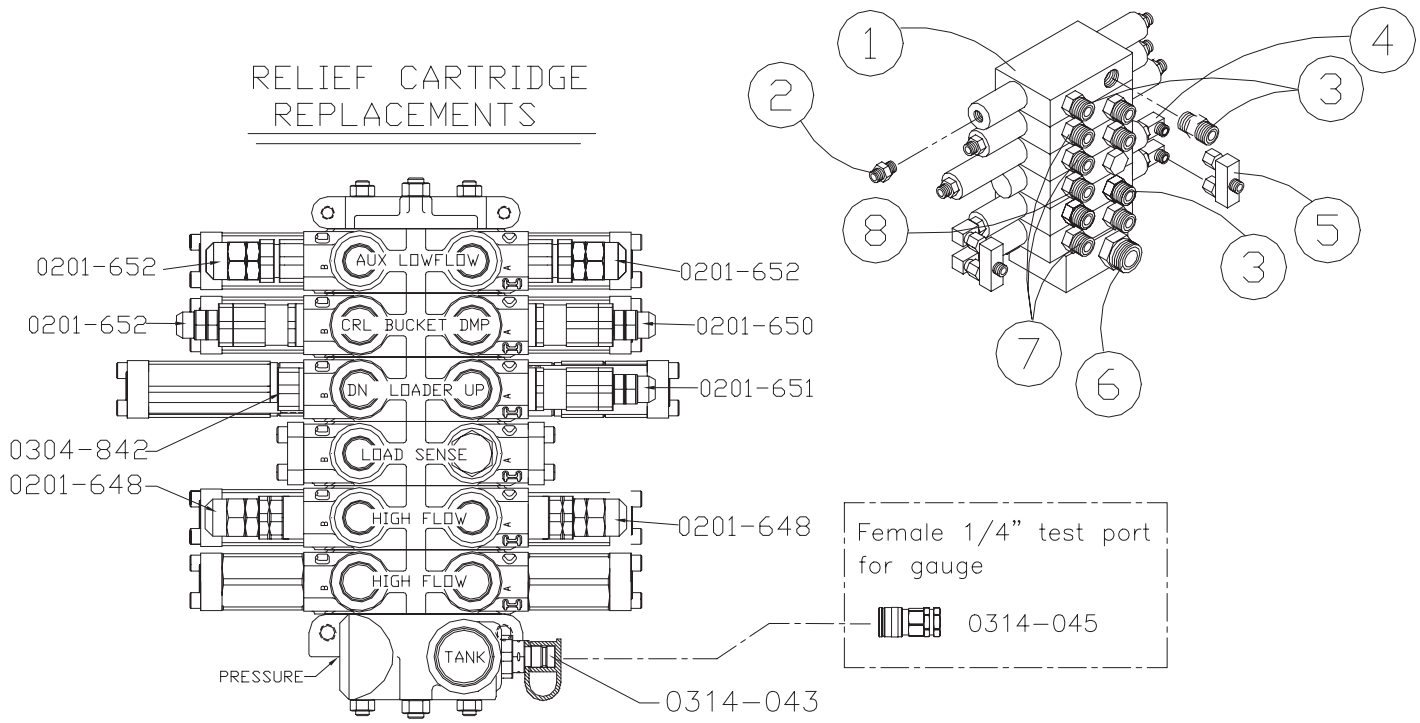

DRIVE/AUX/CHARGE PUMP ASSEMBLY (Serial #: RSF 00101-Current)

REF. NO.	PART NUMBER	QTY.	DESCRIPTION
1	0201-311	15	ADAPTER,FS6400-04-04-0
2	2015-043	1	MANIFOLD,PILOT GENERATION,RC85
3	0310-329	9	ADAPTER,6MFFOR-6MB
4	0310-318	1	ADAPTER,10MFFOR-10MB
5	0201-256	1	PUMP,GEAR,1.58 CID
6	0310-068	1	ADAPTER,12MB-12MFFOR
7	0310-288	4	O-RING,12 ORFF
8	0201-369	2	HOSE,4G1-4FFORX-4FFORX90S-48.5
9	0201-218	1	MANIFOLD,INTAKE
10	0301-405	2	CLAMP,HOSE,#20
11	0201-485	1	HOSE,DUROFLEX,1.0IDx19.25
12	0201-337	1	ADAPTER,SFK-32
13	0201-313	1	ADAPTER,4601-16-10NW0
14	2040-164	1	COUPLING, A10VO71 K01 5/8"
15	0201-254	1	PUMP,AUX,LS
16	0201-240	1	WLMT,SUPPORT,TRANNY
17	0201-359	2	HOSE,6G1-6FFORX-6FFORX90S-38"
18	0201-358	1	HOSE,16G5K-16FFORX-16FL90M-24"
19	2045-198	1	PUMP TANDEM
20	0201-658	1	ADAPTER,10MFFOR-8MB-S
21	0310-321	2	ADAPTER,12MFFOR-12MB90
22	0201-316	2	ADAPTER,FS6801-L-12-12-NW0
23	0201-155	1	TEE,W/RELIEF,15 PSI
24	0201-367	1	HOSE,12G6K-12FFORX-12FLC90-70"
25	0201-381	1	HOSE,12G6K-12FFORX-12FLC30-68"
26	0201-372	1	HOSE,12G6K-12FFORX-12FLC30-57"
27	0201-370	1	HOSE,12G6K-12FFORX-12FLC90-60"
28	0201-371	1	HOSE,8G1-8FFORX-8FFORX671/2-69
29	0201-368	1	HOSE,8G1-8FFORX-8FFORX671/2-81
30	0303-175	2	HOSE,CLAMP,2.75,HI-TORQUE
31	0201-486	1	HOSE,DURAFLEX,1.25x10.00
32	0314-014	1	ADAPTER,6MFFOR-4MB
33	0201-410	1	FLANGE,SPLIT,CODE 61
34	0201-241	1	WLMT,BRKT,SUPPORT,PUMP
35	8040-606	1	NUT,HEX,NYLOCK,1/2-13 UNC,ZN
36	0201-364	1	HOSE,6G6K-6FFORX90S-6FFORX90S-
37	0201-484	1	HOSE,MEGA-VAC,2.5IDx25.5
38	0201-543	1	CAPSCREW,HH,1/2-13x10
39	0201-777	1	O-RING,101.27mm x 2.62mm
40	0300-696	1	O-RING,AUXILIARY PUMP
41	0310-289	1	O-RING,16 ORFF
42	0201-778	1	O-RING,#228
43	0201-575	2	CAPSCREW,HH,1/2-13x1.625,GD8
44	0304-404	2	WASHER,FLAT,1.125 OD x .5 ID x 1/4,ZN
45	0403-001	4	O-RING VALVE RELIEF
46	0403-002	4	O-RING BACK-UP VALVE RELIEF
47	0201-876	4	VALVE,RELIEF,5500 PSI
48	0403-100	1	RELIEF POSI POWER
49	2045-759	1	VALVE CONTROL W/ RELIEF
50	0304-384	2	CLAMP,HOSE # 16
51	8051-332	2	WASHER,SPRING LOCK,1/2,ZN
52	0201-357	1	HOSE,6G1-6FFORX-6FFORX90S-47"

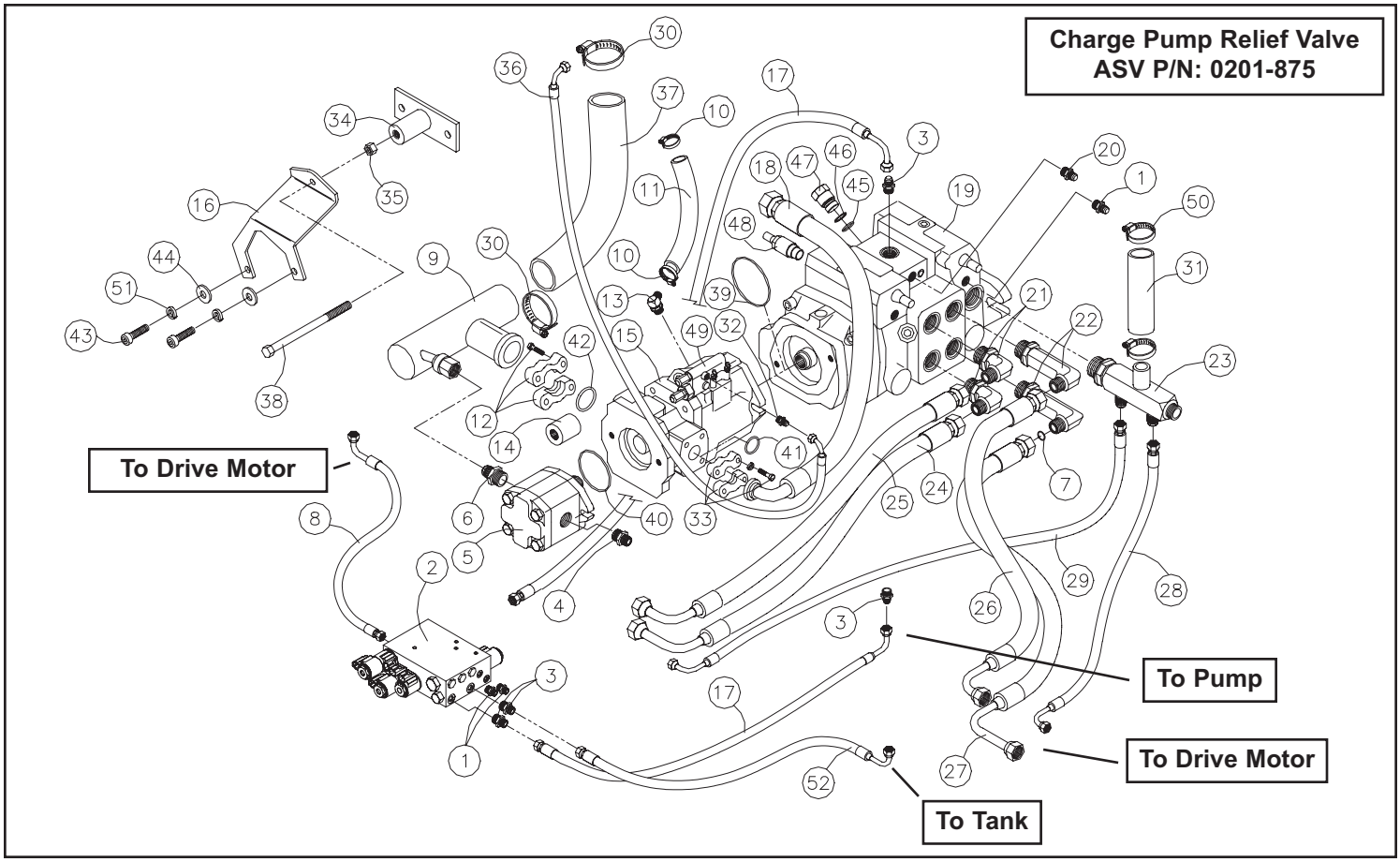

PILOT GENERATION BLOCK (Serial #: RSF 00101-Current)

REF. NO.	PART NUMBER	QTY.	DESCRIPTION
1	0200-364	6	SOLENOID,W/DEUTSCH CONNECTOR
2	0118-164	2	SPOOL,SOLENOID,3POSITION,4WAY
3	0118-165	2	SPOOL,SOLENOID,2POSITION,3WAY
4	0201-728	1	HARNESS,SOLENOID,GEN BLOCK

REF. NO.	PART NUMBER	QTY.	DESCRIPTION

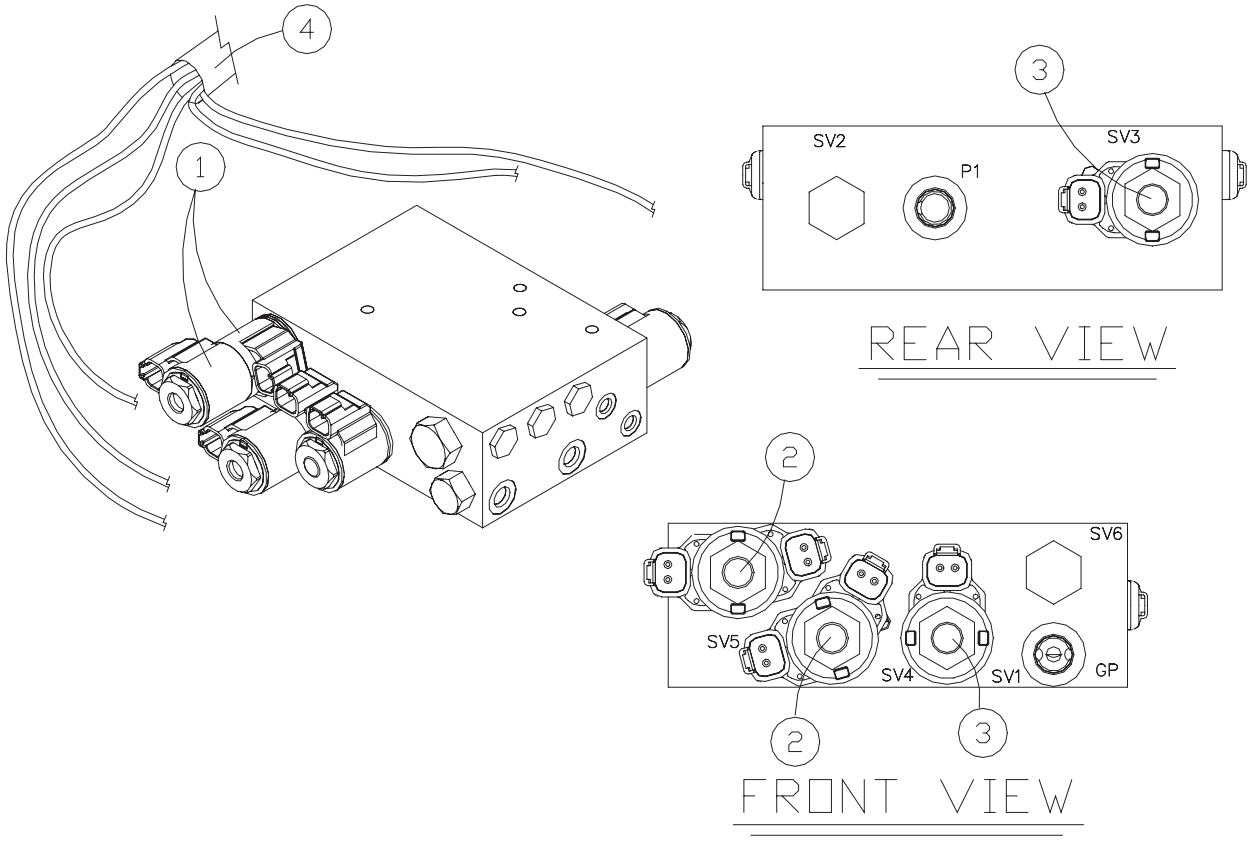

ENGINE ASSEMBLY (Serial #: RSF 00486-Current)

REF. NO.	PART NUMBER	QTY.	DESCRIPTION
1	8040-726	4	NUT,HEX,NYLOCK,5/8-11 UNC,ZN
2	0201-409	4	WASHER,MNT,MOTOR
3	0201-315	4	MOUNT,MOTOR,RUBBER
4	8102-561	4	CAPSCREW,HH,5/8-11UNCx3.00,GD8
5	0201-157	1	WLMT,MNT,MOTOR,FRONT
6	0310-468	8	CAPSCREW,HH,M10x1.5x35,ZINC PL
7	0301-781	12	WASHER,SPLIT LOCK,10mm,ZN
8	0301-389	4	CAPSCREW,HH,M10 x 1.50 x 30,ZN
9	8104-224	8	CAPSCREW,HH 3/8-24UNFx 1.25 GD
10	8051-272	8	WASHER,SPRING LOCK,3/8,ZN
11	0201-300	1	WLMT,BRKT,THROTTLE
12	0300-581	1	W/NUTS,U-BOLT,1/4-20
13	0300-455	1	CABLE,THROTTLE
14	0201-859	1	FILTER,OIL,ENGINE,PERKINS,1104
15	0201-304	1	ROD,THROTTLE
16	0307-720	1	CAPSCREW,HH,M8x1.25x20
17	8050-222	7	WASHER,WROUGHT,1/4,STD,ZN
18	0201-303	1	SWIVEL,THROTTLE
19	8040-366	4	NUT,HEX,NYLOCK,1/4-20 UNC,ZN
20	8102-042	1	CAPSCREW, HH 1/4-20UNC 1" GD8
21	0201-857	1	FILTER FUEL,PERKINS,1104C-44&4
22	0200-352	2	HOSE,FUEL,5/16IDx17.00"
23	0300-732	6	CLAMP,HOSE,#4
24	8102-046	3	CAPSCREW,HH,1/4-20UNCx1.75,GD8
25	0201-539	1	WLMT,MNT,PUMP,FUEL
26	0201-645	2	BELT,V, A SERIES, 1/2 x 48.00
27	0201-761	2	WLMT,MNT,MOTOR
28	8051-332	9	WASHER,SPRING LOCK,1/2,ZN
29	0310-523	9	CAPSCREW,HH M12 x 1.75 x 25mm
30	8102-138	1	CAPSCREW,HH,5/16-18 X 2.25 GD8
31	0310-584	1	PLATE,COVER TCP-T2
32	0310-583	4	CLAMP,SET,T2050-PP
33	0201-306	1	WLMT,BRKT,CLAMP
34	0310-451	1	HEATER,BLOCK,1000W
35	0310-452	1	CORD,HEATER,BLOCK
36	0310-269	2	CABLE,GRND
37	0310-268	1	CABLE,GRND
38	0201-395	1	CABLE,BATTERY,POSITIVE
39	2015-045	1	ENGINE,PERKINS,1104C-44
40	2015-027	1	FLANGE,PUMP,MNT
41	2015-026	1	PLATE,PUMP,MNT
42	0300-718	2	W/PIN,CLEVIS (THROTTLE CABLE)
43	0310-610	2	ADAPTER,FUEL
44	8102-224	2	CAPSCREW,HH,3/8-16UNCx1.25,GD8
45	8050-262	2	WASHER,WROUGHT,5/16,STD,ZN
46	8040-486	2	NUT,HEX,NYLOCK,3/8-16 UNC,ZN
47	0201-858	1	FILTER,FUEL,WATER,PERKINS,1104
48	2015-028	1	HUB,PUMP,MNT
49	0201-712	1	KIT,DIPSTICK,LONG
50	0201-643	1	PULLEY,DOUBLE V,160MM,DIA.
51	0201-869	1	SPACER,.438IDx.75ODx.375
52	0300-980	1	WASHER,1.447 x .406 x .125
53	8102-315	1	CAPSCREW,HH,7/16-14UNCX1.5 GD8
54	0201-655	1	SPACER,ENGINE
55	0201-950	1	ASSY,FILTER,FUEL,PERKINS,1104C
56	2040-107	1	BOWL, FUEL
57	0090-005	1	CAPSCREW HH M8 x 1 25 x 45 GR 8.8
	CAT ENGINE		(SN: RSF 00101-485)
(SEE	CAT SERVICE	ITEMS PAGE AT THE FRONT OF THIS MANUAL)	

OPTIONAL
Temp. Gauge Kit
ASV P/N: 0201-772

Part #	Description
0201-763	Sending unit
0201-764	Gauge Housing kit
0201-765	Harness, s-unit
0201-766	Harness, console
0201-788	Bracket, gauge
0201-789	Decal, water temp
0300-353	Gauge, temp
0304-874	Screw, 10-32, PH
8040-276	Nut, 10-32 (nylok)
8042-122	Nut, 6-32

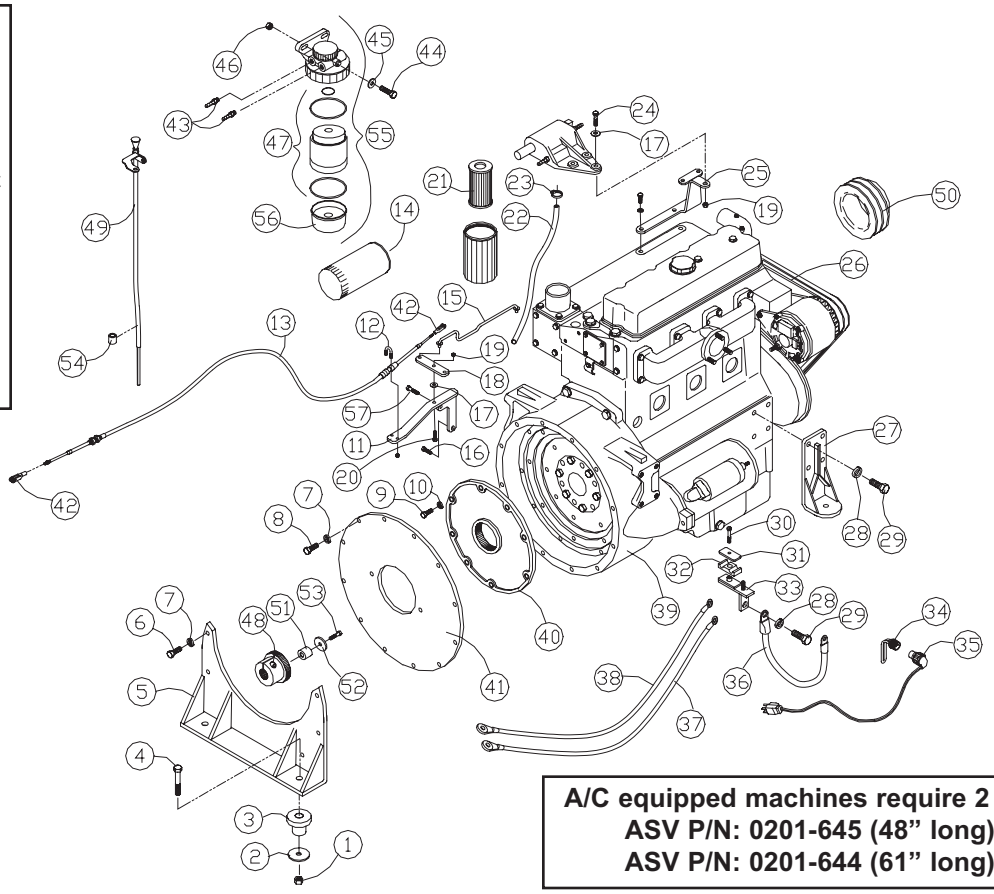

A/C equipped machines require 2 drive belts:
ASV P/N: 0201-645 (48” long) Qty: 1
ASV P/N: 0201-644 (61” long) Qty: 1

INTAKE/EXHAUST ASSEMBLIES (Serial #: RSF 00101-Current)

REF. NO.	PART NUMBER	QTY.	DESCRIPTION
1	0310-649	1	REDUCER, INTAKE 4.0-3.0
2	0309-450	1	PRECLEANER,ENGINE,AIR,4"
3	0201-533	1	FILTER,AIR,SAFETY
4	0201-510	1	FILTER,AIR,PRIMARY
5	0310-631	1	CANISTER,FILTER,3.75
6	2015-022	1	CLAMP,HOSE,3.75" x 4.125"
7	0201-699	1	TUBE,INTAKE,NATURAL
8	0303-175	1	HOSE,CLAMP,2.75,HI-TORQUE
9	8040-486	4	NUT,HEX,NYLOCK,3/8-16 UNC,ZN
10	0310-633	1	VALVE,EXPULSION,DUST
11	0201-532	1	BAND,MNT,AIR CLEANER
12	8102-224	2	CAPSCREW,HH,3/8-16UNCx1.25,GD8
13	8050-262	2	WASHER,WROUGHT,5/16,STD,ZN
14	0201-700	1	ASSY,PIPE,EXHAUST,NATURAL
15	0201-671	6	SPRING,TAILPIPE
16	0300-263	1	CLAMP,MUFFLER,2"
17	8050-277	4	WASHER,WROUGHT,3/8,SAE,ZN
18	0201-349	1	WLMT,MUFFLER
19	8102-222	4	CAPSCREW,HH,3/8-16 UNCx1.0,GD8
20	0201-854	1	KIT,SCREEN,PRECLEANER,RC100/RC
21	0201-822	1	PIPE,EXHAUST
22	0201-823	1	PIPE,EXHAUST,MID
23	0201-537	1	TAILPIPE,OUTLET
24	0201-401	1	SPRING, RING
25	0201-923	1	BLADE,PRECLEANER
26	0310-468	3	CAPSCREW,HH,M10x1.5x35,ZINC
27	0301-781	3	WASHER,SPLIT LOCK,10mm,ZN
28	0307-790	3	NUT,HEX,JAM,M10x1.5,ZN

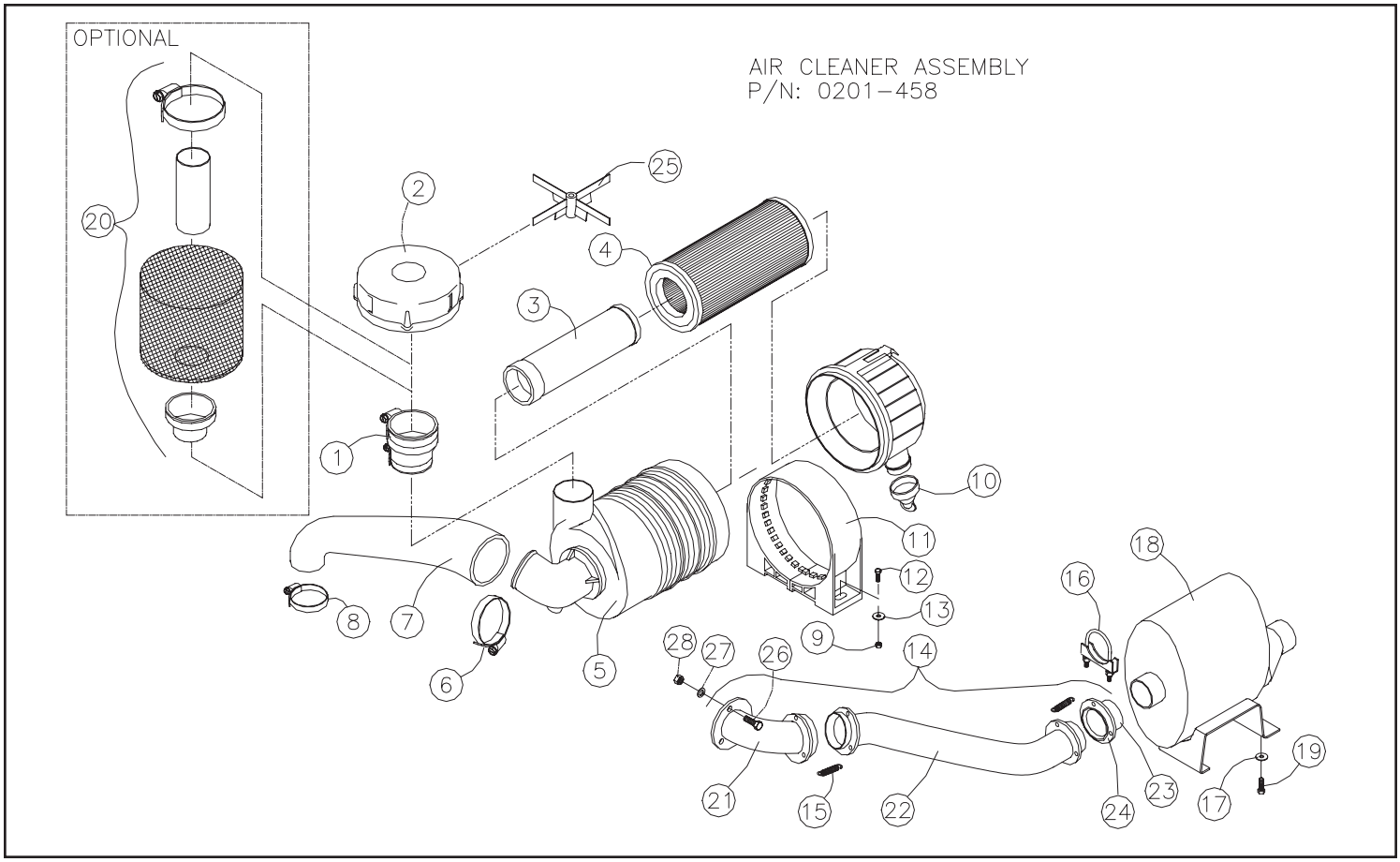

BATTERY ASSEMBLY (Serial #: RSF 00101-Current)

REF. NO.	PART NUMBER	QTY.	DESCRIPTION
1	8040-486	1	NUT,HEX,NYLOCK,3/8-16 UNC,ZN
2	8050-277	1	WASHER,WROUGHT,3/8,SAE,ZN
3	0310-501	1	GUARD,BATTERY
4	0201-255	1	ROD,HOLD DOWN,BATTERY
5	0310-268	1	CABLE,GRND
6	0201-395	1	CABLE,BATTERY,POSITIVE
7	0301-083	2	PROTECTOR,POST,BATTERY
8	0301-659	1	BATTERY,12V,950 CCA,GRP 31
9	0201-394	1	CABLE,BATTERY,POSITIVE,JUMPER
10	0201-435	1	CABLE,BATTERY,NEGATIVE,JUMPER
11	0201-336	1	TERMINAL,BATTERY,REMOTE,POS.
12	0201-324	1	TERMINAL,BATTERY,REMOTE,NEG.
13	0310-583	1	CLAMP,SET,T2050-PP
14	0310-584	1	PLATE,COVER TCP-T2
15	8102-134	1	CAPSCREW,HH,5/16-18UNCx1.25GD8

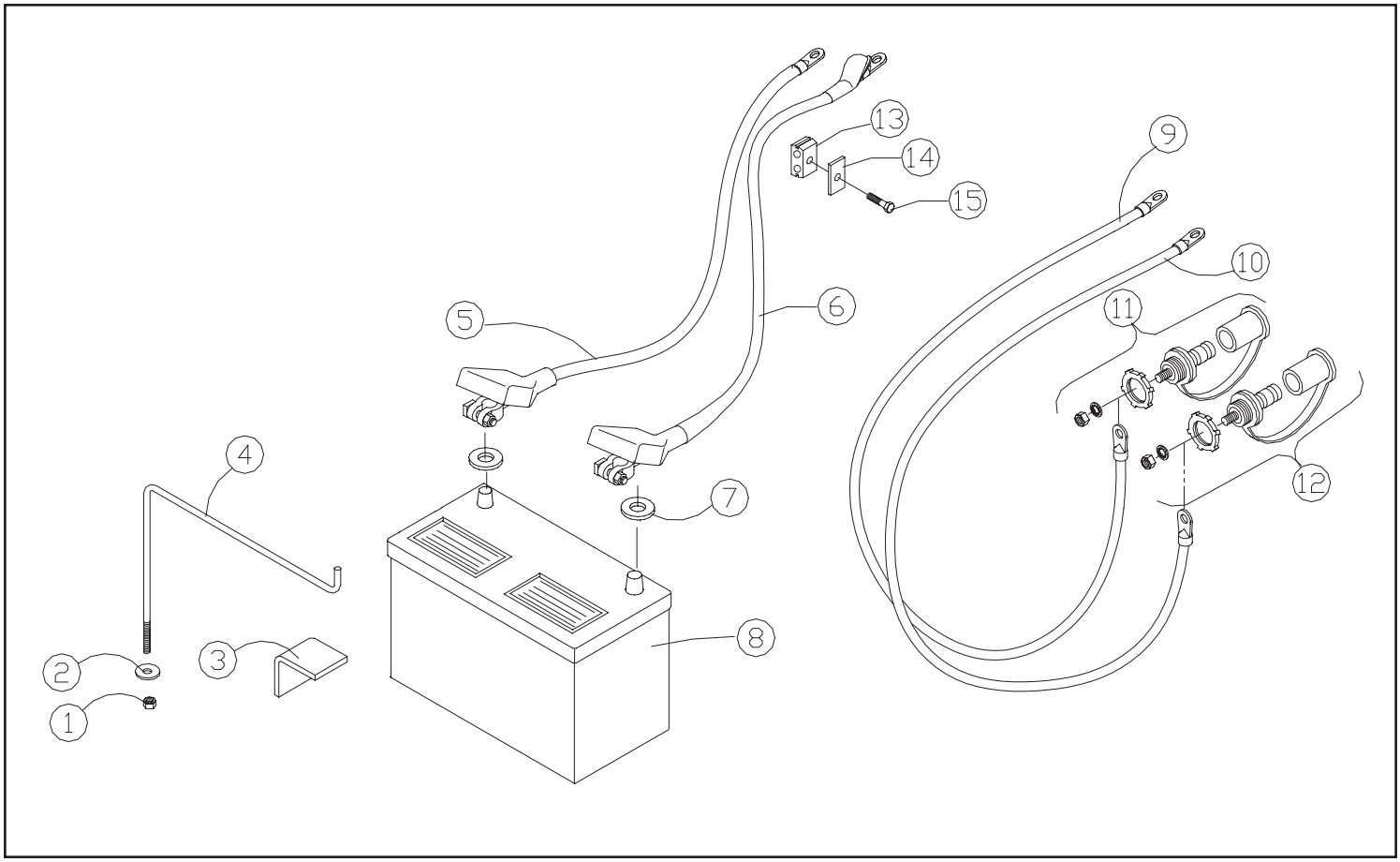

FUSE PANEL ASSEMBLY (Serial #: RSF 00101-Current)

REF. NO.	PART NUMBER	QTY.	DESCRIPTION
1	0201-376	1	HARNESS,WIRING,REAR
2	0310-807	2	RELAY,MINI, 35 AMP
3	0310-804	1	FUSE,MAXI, 60 AMP
4	0304-519	6	RELAY,PLUG,GLOW
5	0310-800	1	FUSE,MAXI,20 AMP
6	0310-803	2	FUSE,MAXI, 50 AMP
7	0310-802	2	FUSE,MAXI, 40 AMP
8	0310-794	5	FUSE,MINI, 5 AMP
9	0310-795	6	FUSE,MINI,10 AMP
10	0310-793	2	FUSE,MINI,2 AMP
11	0310-806	11	RELAY,MICRO, 20 AMP
12	0310-811	1	DIODE, 3 AMP
13	0310-796	2	FUSE,MINI,15 AMP
14	0310-798	1	FUSE,MINI,25 AMP
15	0310-801	1	FUSE,MAXI, 30 AMP
16	0310-805	1	FUSE,MAXI, 80 AMP
17	0200-510	1	RESISTOR,33OHM/3WATT,OHMITE43F
18	0201-779	1	FUSE,MINI,3 AMP
19	0310-799	1	FUSE,MINI,30 AMP
20	0201-885	1	COVER,PANEL,FUSE,W/DECALS,RC100/85

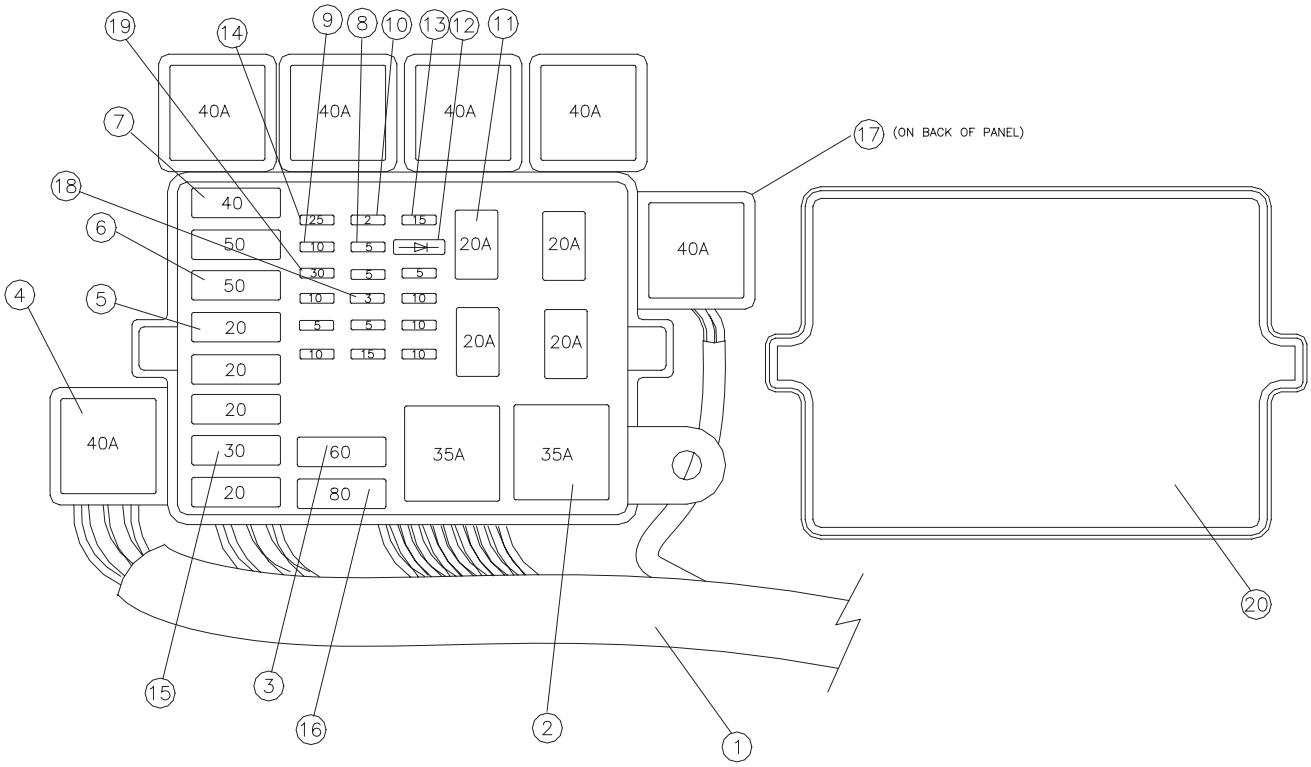

TORSION AXLE ASSEMBLY (Serial #: RSF 00101-Current)

REF. NO.	PART NUMBER	QTY.	DESCRIPTION
1	0201-897	16	CAPSCREW,5/8-11X2.5 GD8
2	8050-407	32	WASHER,5/8 x .120,ZN
3	8051-431	16	WASHER,SPRING LOCK,5/8,ZN
4	8040-726	16	NUT,HEX,NYLOCK,5/8-11 UNC,ZN
5	0201-131	1	AXLE,TORSION,FRONT
6	0201-130	1	AXLE,TORSION,REAR
7	0201-574	8	WASHER,SPRING,LOCK,12MM
8	0201-148	4	RETAINER,AXLE
9	0201-547	8	CAPSCREW,HH,GR8.8,M12x1.75x55
10	0201-905	4	SHIM,AXLE,12GA,W/SLOT

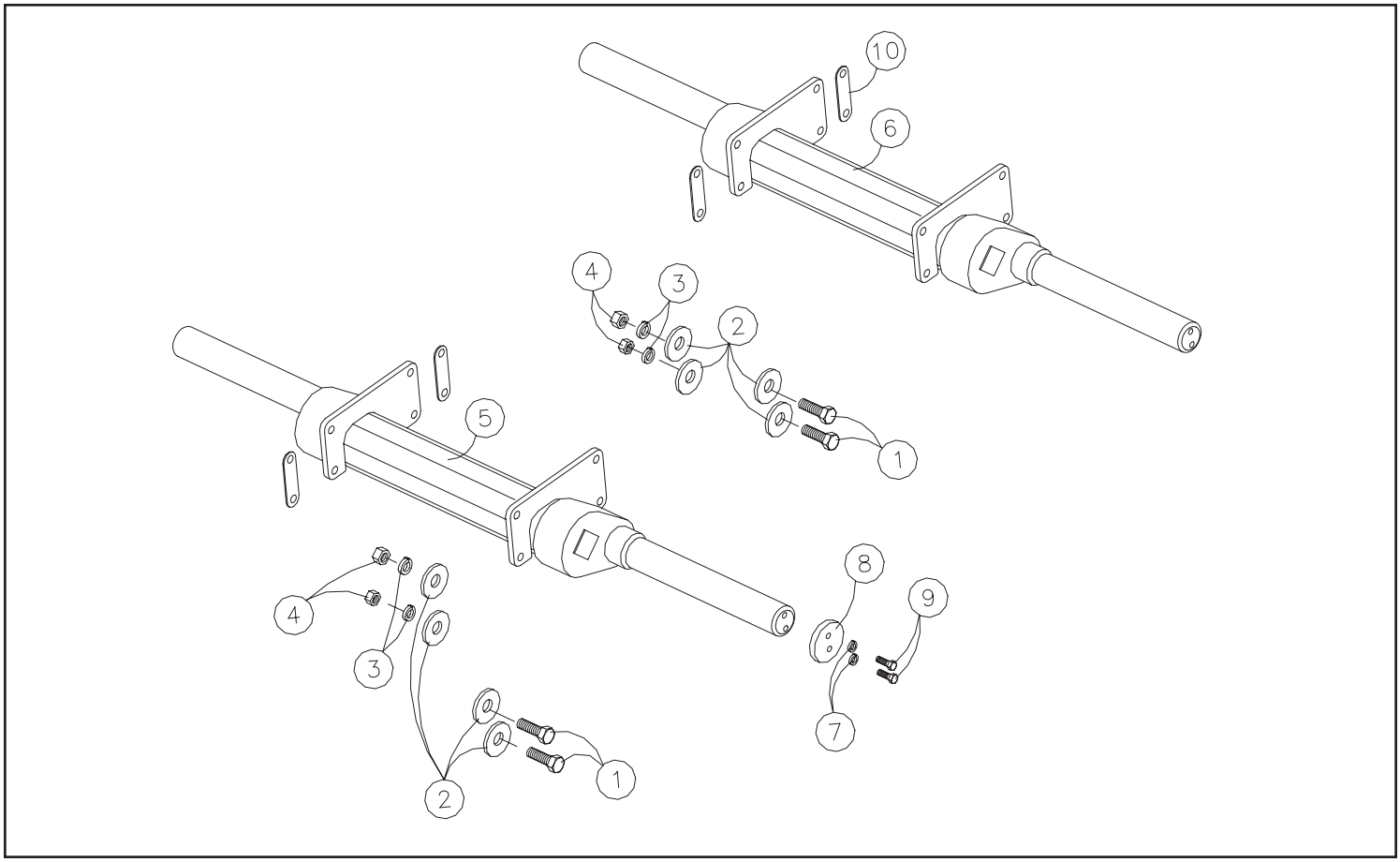

TRACK INSTALLATION TOOL (Serial #: RSF 00101-Current)

REF. NO.	PART NUMBER	QTY.	DESCRIPTION
1	0703-138	1	ASSY,TOOL,TRACK,RC100
2	0703-137	1	WLMT,LEVER
3	8040-486	4	NUT,HEX,NYLOCK,3/8-16 UNC,ZN
4	0703-131	1	WLMT,PUSH,ROUNDED
5	8102-232	1	CAPSCREW,HH,3/8-16,UNCx3.25,GD
6	8102-235	1	CAPSCREW,HH,3/8-16UNCx4.5,GD8,
7	8102-226	2	CAPSCREW,HH 3/8-16UNCx1.75 GD8
8	8051-272	2	WASHER,SPRING LOCK,3/8,ZN
9	0300-980	2	WASHER,1.447 x .406 x .125
10	0703-125	1	WLMT,PLATE

REF. NO.	PART NUMBER	QTY.	DESCRIPTION

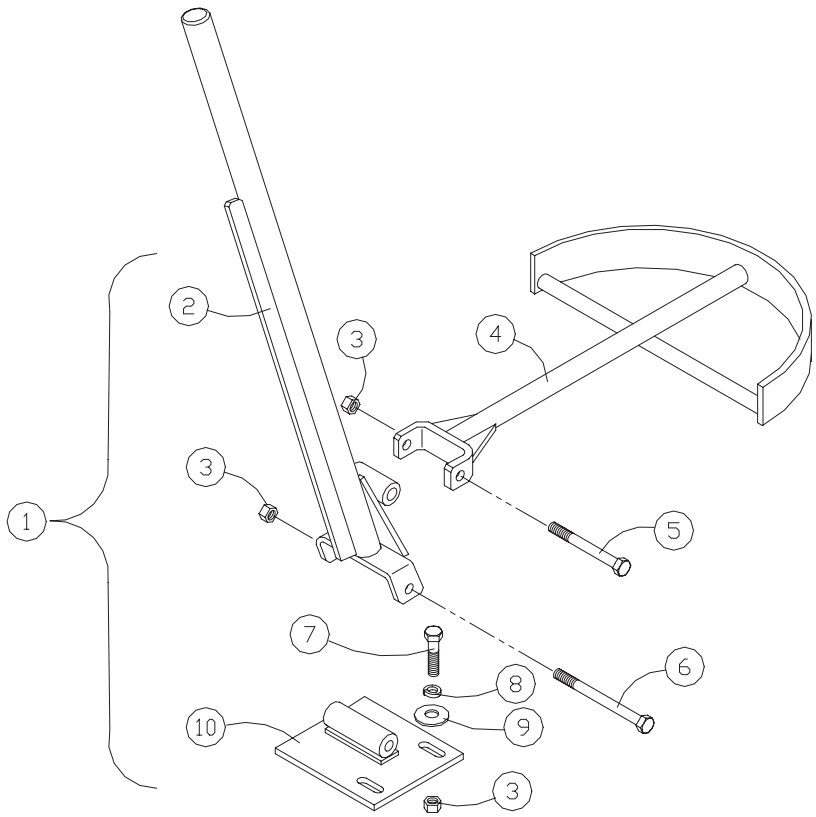

UNDERCARRIAGE ASSEMBLY, RT (Serial #: RSF 00101-Current)

REF. NO.	PART NUMBER	QTY.	DESCRIPTION
1	2020-006	1	WLMT,TUB,OPEN,RH
2	0703-112	1	SCRAPER,W/ADJUSTABLE REAR
3	0703-113	1	SCRAPER,W/ADJUSTABLE FRONT
4	0703-111	4	PLATE,AXLE,EXT,0.5"
5	0307-093	10	LOCK,AXLE,CARRIAGE
6	8051-272	36	WASHER,SPRING LOCK,3/8,ZN
7	8102-222	38	CAPSCREW,HH,3/8-16 UNCx1.0,GD8
8	8102-222	2	CAPSCREW,HH,3/8-16 UNCx1.0,GD8
9	2035-344	4	NUT,3/8-16,UNC,WHIZLOCK,GD8
10	0703-193	2	ASSY,TUBE,14”,W/WHEELS,GREASE
11	0700-284	5	ASSY,TUBE,W/WHEELS,10"
12	0703-094	1	MOUNT,AXLE,MACHINED
13	8050-440	8	WASHER,WROUGHT,3/4,SAE,ZN
14	8102-674	8	CAPSCREW,HH,3/4-10UNCx1.25,GD8
15	0703-061	1	TRACK,HIPLUG,199.92@PL
16	0300-946	1	FITTING,GREASE,1/8 NPT
17	2020-037	1	ASSY,TABLE,LIGHT,RH
18	2020-034	1	ASSY,TURNBUCKLE,LIGHT
19	0703-118	2	PIN,CLEVIS,.75x4.00
20	0703-025	4	BUSHING,DU,2.50x3.50
21	0400-130	2	CLIP,HAIRPIN,.125
22	2020-035	2	BUSHING,.875 x .657 x .500
23	8040-726	2	NUT,HEX,NYLOCK,5/8-11 UNC,ZN
24	8102-586	2	CAPSCREW,HH,5/8-11X1.75ZN,GD8
25	8050-407	2	WASHER,5/8 x .120,ZN
26	8051-431	4	WASHER,SPRING LOCK,5/8,ZN
27	8102-587	2	CAPSCREW,HH 5/8-11UNCx 2.0 GD8
28	0201-147	2	SPACER, AXLE
29	2020-029	1	WLMT,ROD,LH
30	0703-162	1	WLMT,TENSIONER,OPEN
31	2020-033	1	END,TURNBUCKLE,RH
32	0304-077	1	NUT,HEX,JAM,1 1/4 - 7,RH
33	8111-224	2	BOLT,CARRIAGE,3/8-16UNCX1.25,GD8

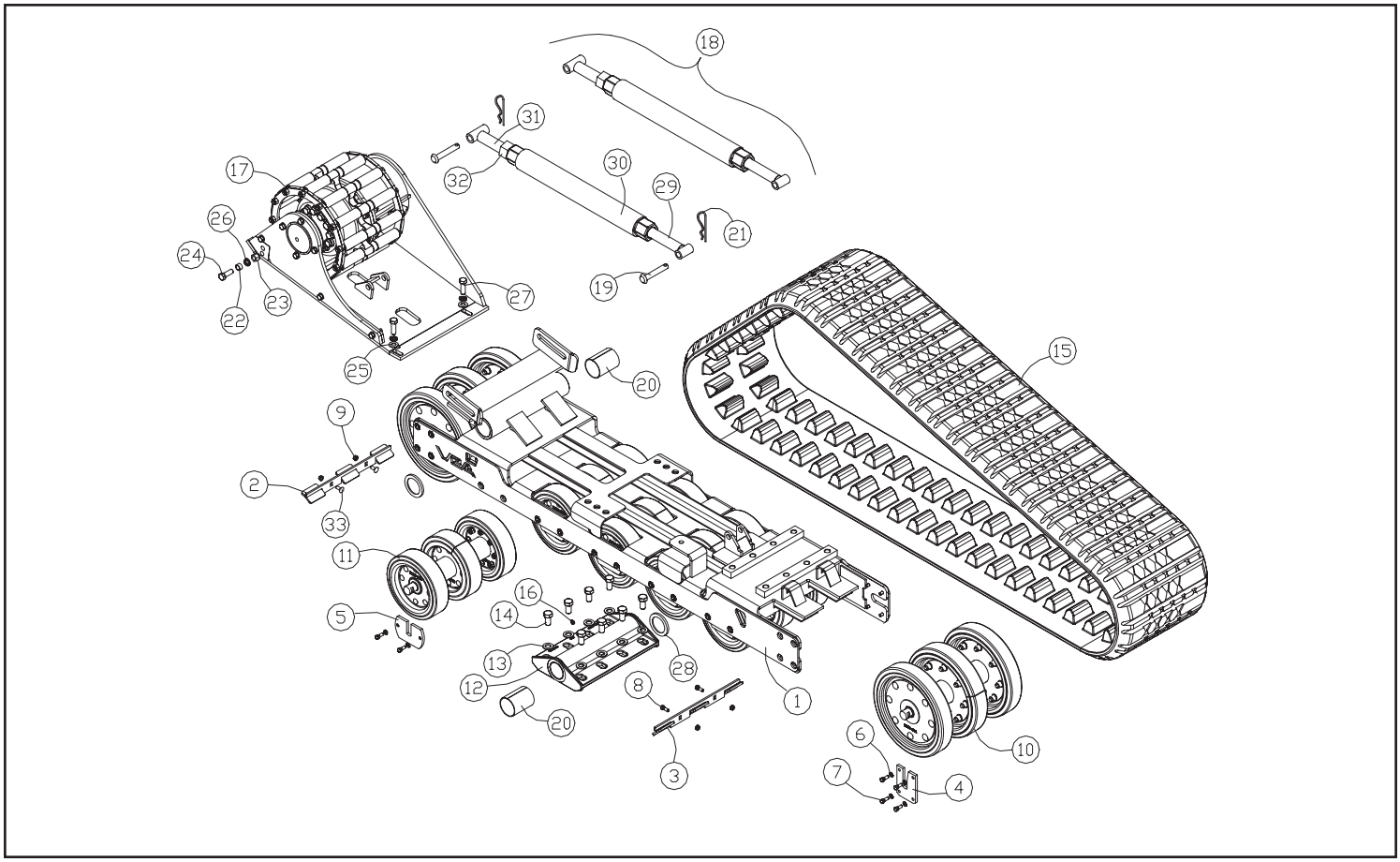

UNDERCARRIAGE ASSEMBLY, LT (Serial #: RSF 00101-Current)

REF. NO.	PART NUMBER	QTY.	DESCRIPTION
1	2020-007	1	WLMT,TUB,OPEN,LH
2	0703-112	1	SCRAPER,W/ADJUSTABLE REAR
3	0703-113	1	SCRAPER,W/ADJUSTABLE FRONT
4	0703-111	4	PLATE,AXLE,EXT,0.5"
5	0307-093	10	LOCK,AXLE,CARRIAGE
6	8051-272	36	WASHER,SPRING LOCK,3/8,ZN
7	8102-222	38	CAPSCREW,HH,3/8-16 UNCx1.0,GD8
8	8102-222	2	CAPSCREW,HH,3/8-16 UNCx1.0,GD8
9	2035-344	4	NUT,3/8-16,UNC,WHIZLOCK,GD8
10	0703-193	2	ASSY,TUBE,14",W/WHEELS,GREASE
11	0700-284	5	ASSY,TUBE,W/WHEELS,10"
12	0703-094	1	MOUNT,AXLE,MACHINED
13	8050-440	8	WASHER,WROUGHT,3/4,SAE,ZN
14	8102-674	8	CAPSCREW,HH,3/4-10UNCx1.25,GD8
15	0703-061	1	TRACK,HIPLUG,199.92@PL
16	0300-946	1	FITTING,GREASE,1/8 NPT
17	2020-038	1	ASSY,TABLE,LIGHT,LH
18	2020-034	1	ASSY,TURNBUCKLE,LIGHT
19	0703-118	2	PIN,CLEVIS,.75x4.00
20	0703-025	4	BUSHING,DU,2.50x3.50
21	0400-130	2	CLIP,HAIRPIN,.125
22	2020-035	2	BUSHING,.875 x .657 x .500
23	8040-726	2	NUT,HEX,NYLOCK,5/8-11 UNC,ZN
24	8102-586	2	CAPSCREW,HH,5/8-11X1.75ZN,GD8
25	8050-407	2	WASHER,5/8 x .120,ZN
26	8051-431	4	WASHER,SPRING LOCK,5/8,ZN
27	8102-587	2	CAPSCREW,HH 5/8-11UNCx 2.0 GD8
28	0201-147	2	SPACER, AXLE
29	2020-029	1	WLMT,ROD,LH
30	0703-162	1	WLMT,TENSIONER,OPEN
31	2020-033	1	END,TURNBUCKLE,RH
32	0304-077	1	NUT,HEX,JAM,1 1/4 - 7,RH
33	8111-224	2	BOLT,CARRIAGE,3/8-16UNCX1.25,GD8

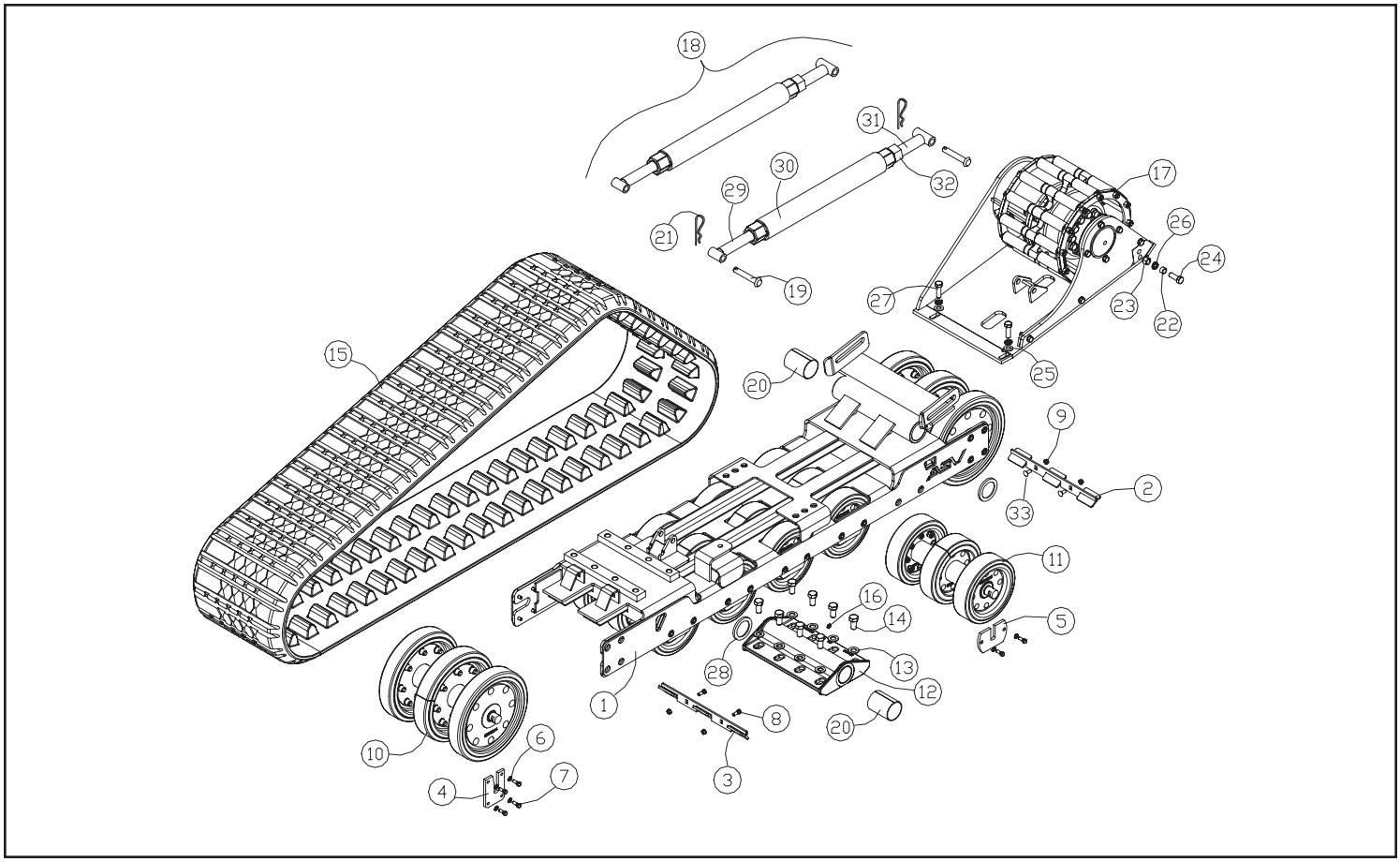

DRIVE TABLE ASSEMBLY, RT (Serial #: RSF 00101-Current)

REF. NO.	PART NUMBER	QTY.	DESCRIPTION
1	0201-558	2	O-RING,0.984IDx0.139CS
2	0201-654	1	ADAPTER,FS,6400,04,06,SHORT
3	0307-074	1	PLUG,HOUSING,BEARING
4	0310-345	1	ADAPTER,8MFFOR--8MB
5	0314-304	1	WLMT,GUARD,SEAL
6	0700-145	1	RING,SNAP,EXT,45mm
7	----------	1	SUB-ASSY,HOUSING,BEARING (SEE NOTE)
8	0700-170	8	WASHER,21 x 22 x 2.5
9	0700-171	8	CAPSCREW,HH,M10 x 1.5 x 45
10	0700-172	4	FLANGE,HALF,12
11	0700-217	1	MOTOR,HYD
12	0700-287	12	WASHER,16mmX30mmX5mm
13	0301-486	12	CAPSCREW,HH M16 x 45mm LONG
14	0703-013	1	ASSY,SPROCKET
15	0703-044	1	WLMT,TABLE,DRIVE,RH
16	0703-058	1	WLMT,BEARING PLATE, RH
17	8040-606	3	NUT,HEX,NYLOCK,1/2-13 UNC,ZN
18	8040-726	8	NUT,HEX,NYLOCK,5/8-11 UNC,ZN
19	8051-332	7	WASHER,SPRING LOCK,1/2,ZN
20	8051-431	8	WASHER,SPRING LOCK,5/8,ZN
21	8102-406	7	CAPSCREW,HH,1/2-13UNCx1.75,GD8
22	8102-588	8	CAPSCREW,HH,5/8-11UNCx2.25,GD8
23	0302-635	24	TOOTH,DRIVE,SPROCKET
24	0302-765	24	SLEEVE,OUTER,TOOTH,SPROCKET
25	0700-065	2	RING,SPROCKET
26	0700-124	12	NUT,TOPLOCK,1/2-13UNC,ZN,GD8
27	8102-422	12	CAPSCREW,HH,1/2-13UNCx13.0,GD8
28	0703-189	1	SPROCKET,MACHINED,THICK

Serial #: RSD00101-383
Item 12: 0700-218 (available)
Item 13: 0700-219 (available)
Item 28: 0700-234 (not available)
(use only with original sprocket casting)

Drive Motor Seal Kit
ASV P/N: 0402-985

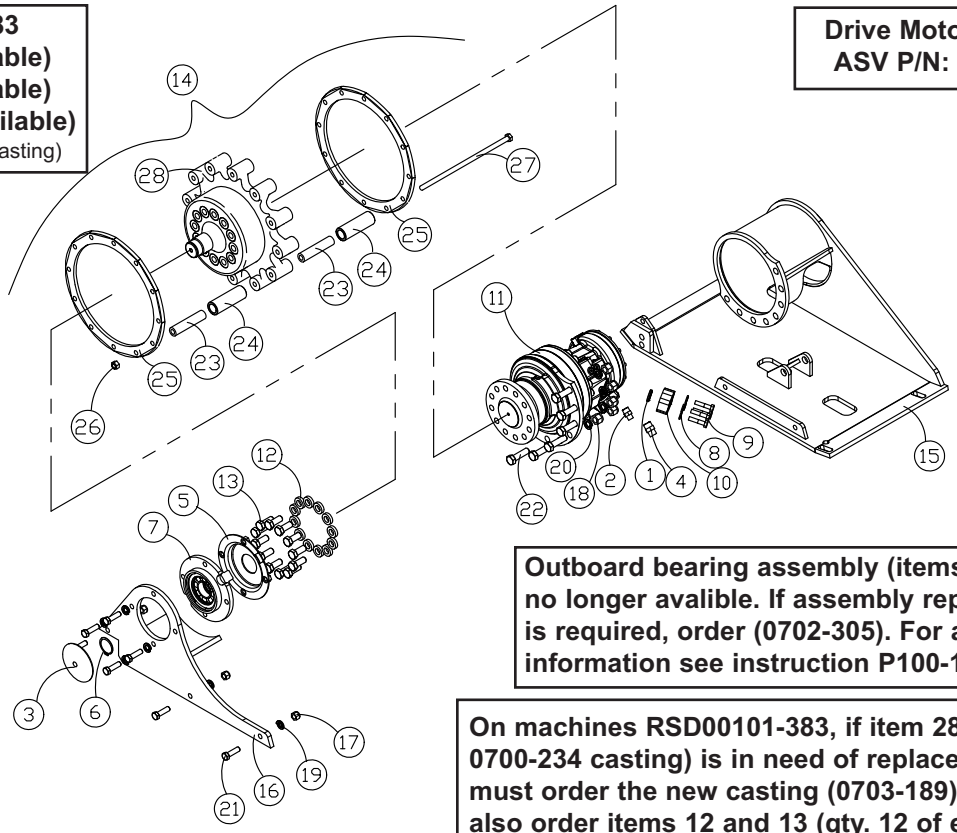

Outboard bearing assembly (items 3,5,6,7) is no longer avalible. If assembly replacement is required, order (0702-305). For additional information see instruction P100-194.

On machines RSD00101-383, if item 28 (original 0700-234 casting) is in need of replacement, you must order the new casting (0703-189). You must also order items 12 and 13 (qty. 12 of each) to ensure proper sprocket fit and function.

DRIVE TABLE ASSEMBLY, LT (Serial #: RSF 00101-Current)

REF. NO.	PART NUMBER	QTY.	DESCRIPTION
1	0201-558	2	O-RING,0.984IDx0.139CS
2	0201-654	1	ADAPTER,FS,6400,04,06,SHORT
3	0307-074	1	PLUG,HOUSING,BEARING
4	0310-345	1	ADAPTER,8MFFOR--8MB
5	0314-304	1	WLMT,GUARD,SEAL
6	0700-145	1	RING,SNAP,EXT,45mm
7	----------	1	SUB-ASSY,HOUSING,BEARING (SEE NOTE)
8	0700-170	8	WASHER,21 x 22 x 2.5
9	0700-171	8	CAPSCREW,HH,M10 x 1.5 x 45
10	0700-172	4	FLANGE,HALF,12
11	0700-217	1	MOTOR,HYD
12	0700-287	12	WASHER,16mmX30mmX5mm
13	0301-486	12	CAPSCREW,HH M16 x 45mm LONG
14	0703-013	1	ASSY,SPROCKET
15	0703-046	1	WLMT,TABLE,DRIVE,LH
16	0703-059	1	WLMT,BEARING,LH
17	8040-606	3	NUT,HEX,NYLOCK,1/2-13 UNC,ZN
18	8040-726	8	NUT,HEX,NYLOCK,5/8-11 UNC,ZN
19	8051-332	7	WASHER,SPRING LOCK,1/2,ZN
20	8051-431	8	WASHER,SPRING LOCK,5/8,ZN
21	8102-406	7	CAPSCREW,HH,1/2-13UNCx1.75,GD8
22	8102-588	8	CAPSCREW,HH,5/8-11UNCx2.25,GD8
23	0302-635	24	TOOTH,DRIVE,SPROCKET
24	0302-765	24	SLEEVE,OUTER,TOOTH,SPROCKET
25	0700-065	2	RING,SPROCKET
26	0700-124	12	NUT,TOPLOCK,1/2-13UNC,ZN,GD8
27	8102-422	12	CAPSCREW,HH,1/2-13UNCx13.0,GD8
28	0703-189	1	SPROCKET,MACHINED,THICK

Drive Motor Seal Kit
ASV P/N: 0402-985

Serial #: RSD00101-383
Item 12: 0700-218 (available)
Item 13: 0700-219 (available)
Item 28: 0700-234 (not available)
(use only with original sprocket casting)

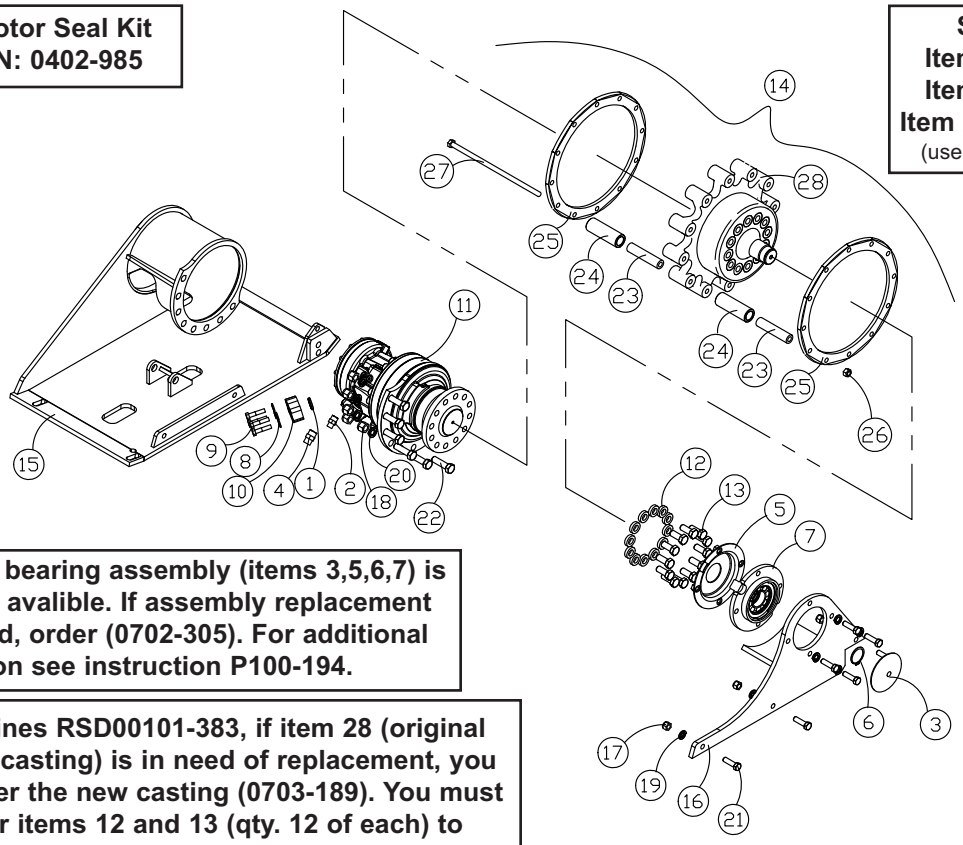

Outboard bearing assembly (items 3,5,6,7) is no longer avalible. If assembly replacement is required, order (0702-305). For additional information see instruction P100-194.

On machines RSD00101-383, if item 28 (original 0700-234 casting) is in need of replacement, you must order the new casting (0703-189). You must also order items 12 and 13 (qty. 12 of each) to ensure proper sprocket fit and function.

10” WHEEL ASSEMBLY (0700-284) (Serial #: RSF 00101-Current)

REF. NO.	PART NUMBER	QTY.	DESCRIPTION
1	0307-009	2	WHEEL,UHMW,OUTER,10"
2	0307-090	2	PLATE,WHEEL,OUTER,6.5 x .1875
3	0307-718	1	WHEEL,SPLIT,10"
4	0700-283	1	ASSY,TUBE,AXLE,W/NO WHEELS
5	8011-225	16	BOLT,CARRIAGE,3/8-16UNCx1.5,ZN
6	8011-226	8	BOLT,CARRIAGE,3/8-16UNCx1.75,Z
7	0703-144	24	NUT,TOP LOCK,STL,3/8-18 UNC
8	8051-272	24	WASHER,SPRING LOCK,3/8,ZN
9	0307-801	2	SEAL,AP1TCY,34x72x23.5
10	0307-923	2	BEARING,BALL,6207-OPEN
11	0307-909	1	AXLE,CARRIAGE
12	0307-919	1	WLMT,TUBE,WHEEL
13	0301-103	1	PLUG,3/8-18 NPT,SOCKET HD

REF. NO.	PART NUMBER	QTY.	DESCRIPTION

Seal Removal Tool
ASV P/N: 0700-162

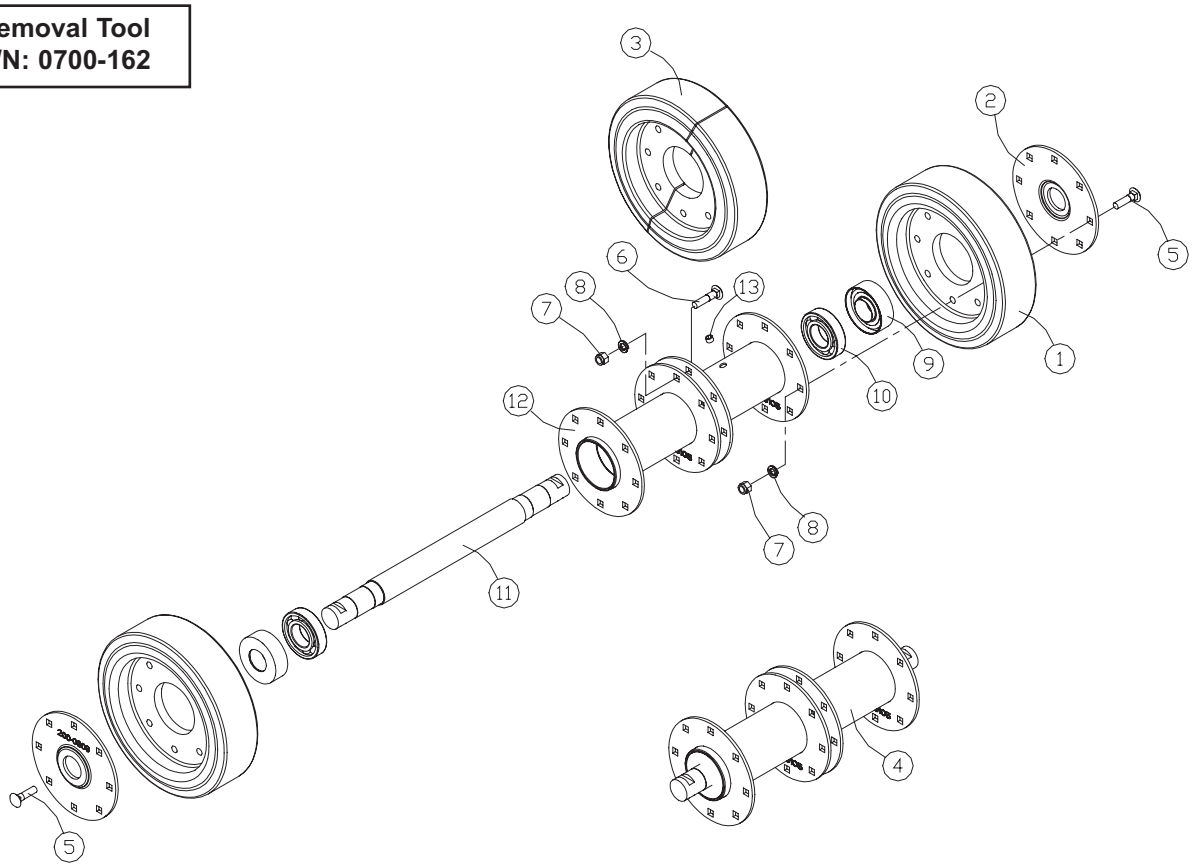

14” WHEEL ASSEMBLY (0703-193) (Serial #: RSF 00101-Current)

REF. NO.	PART NUMBER	QTY.	DESCRIPTION
1	8111-406	24	BOLT,CARRIAGE,1/2-13UNCx1.75,G
2	0703-083	2	WLMT,HUB,9.75,0.5
3	0703-069	2	WHEEL,14"OUTER,1/2"HOLES
4	0307-801	2	SEAL,34mm x 72mm x 23.5
5	0700-235	2	RING,SNAP,O.D,.125THICK,3.00"
6	8051-332	24	WASHER,SPRING LOCK,1/2,ZN
7	0700-124	24	NUT,TOPLOCK,1/2-13UNC,ZN,GD8
8	0703-004	1	WLMT,TUBE,AXLE,14"x3.5ID
9	0301-103	1	PLUG,3/8-18 NPT,SOCKET HD
10	0703-070	1	WHEEL,14",SPLIT,1/2" HOLES
11	0703-086	1	AXLE,CHARLIE END
12	0201-347	2	BEARING CONE,TAPERD END WHEEL
13	0201-348	2	BEARING CUP,TAPERED END WHEEL
14	0703-192	1	ASSY,TUBE,14",W/O WHEELS

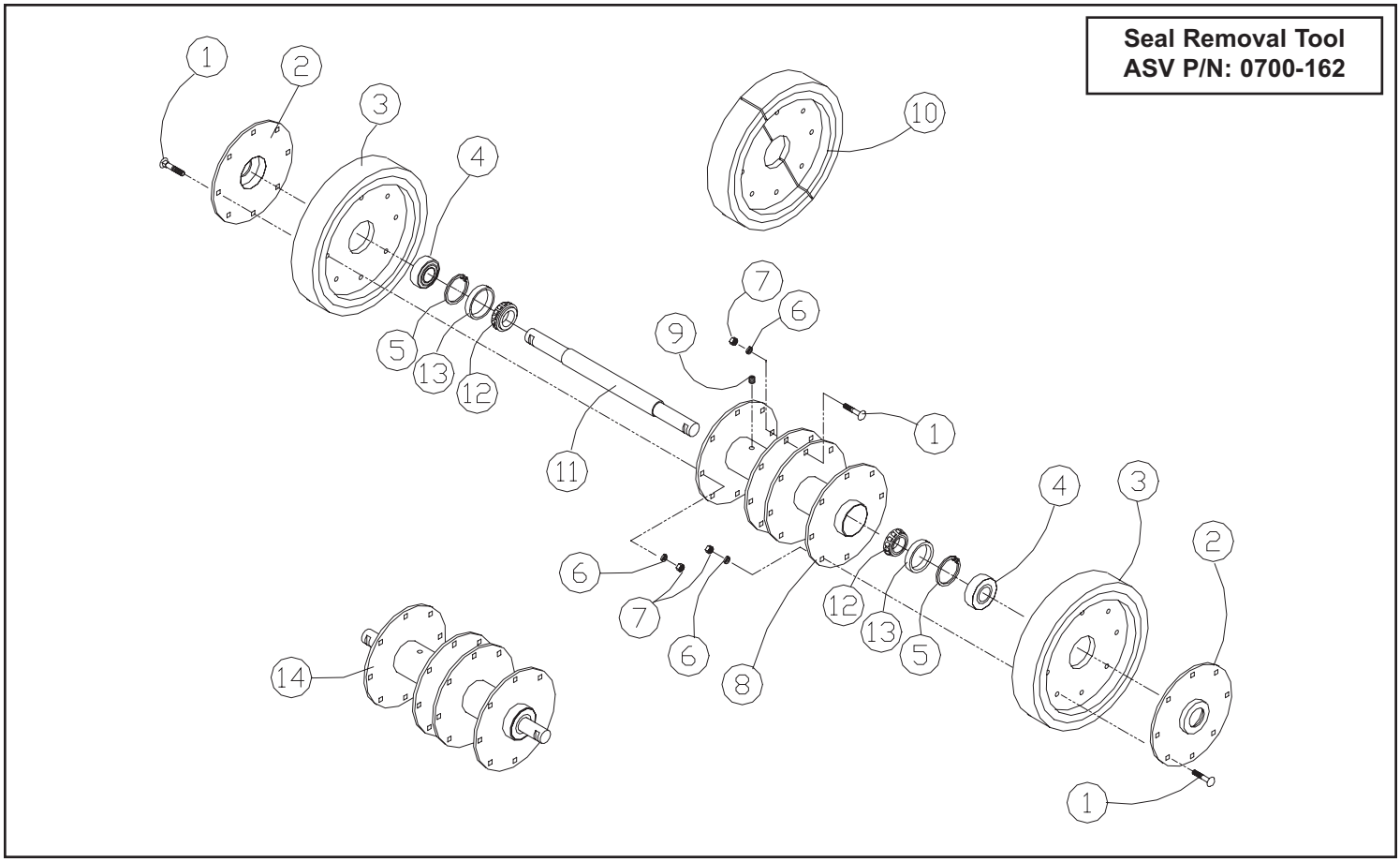

LIFT ARM ASSEMBLY (Serial #: RSF 00101-Current)

REF. NO.	PART NUMBER	QTY.	DESCRIPTION
1	0201-404	1	DECAL,LOADER,RH,FRONT
2	2015-020	1	DECAL,LOADER,RH,REAR
3	0201-231	4	WLMT,PIN,5.50"
4	0300-607	10	ZERK,GREASE,1/4-28
5	8011-222	4	BOLT,CARRIAGE,3/8-16 UNCx1.0,Z
6	0314-269	6	NUT,FLANGE,TOPLK,3/8-16UNC,GDG
7	----------	2	(SEE CYLINDER SERVICE ITEMS PAGE)
8	0201-288	2	WLMT,PIN,1.5ODx4.74
9	0201-352	2	HOSE,8M4K-8FFORX-8FFORX-24"
10	0310-627	2	TUBE,HYD,CYLINDER
11	0201-353	2	HOSE,8M4K-8FFORX-8FFORX-45.50"
12	0310-345	8	ADAPTER,8MFFOR--8MB
13	0201-025-yel	1	WLMT,LOADER
14	2015-019	1	DECAL,LOADER,LH,REAR
15	0201-406	1	DECAL,LOADER,LH,FRONT
16	8102-220	2	CAPSCREW,HH,3/8-16x0.75",GD8
17	0201-408	1	DECAL,LOADER,FRONT
18	0201-022	2	WLMT,PIN
19	0201-852	2	WLMT,PIN
20	----------	1	(SEE CYLINDER SERVICE ITEMS PAGE)
21	0201-488	2	HOSE,8M4K-8FFORX-8FFORX-23.5"
22	----------	1	(SEE CYLINDER SERVICE ITEMS PAGE)
23	0201-489	2	HOSE,8M4K-8FFORX-8FFORX-17.5"
24	8102-222	6	CAPSCREW,HH,3/8-16 UNCx1.0,GD8
25	0201-852	2	WLMT,PIN,6.00"
26	0201-660	1	LOCK,LOADER,REMOVABLE
27	0201-477	2	PIN,LOCKING,D-RING,3.00"
28	0201-234	2	BUSHING,1.50IDx1.75ODx2.00L
29	0201-236	2	BUSHING,1.50IDx1.75ODx3.25L
30	0201-233	4	BUSHING,1.50IDx2.00ODx3.00L
31	0201-235	4	BUSHING,1.50IDx1.75ODx2.75L
32	0201-392	1	HARNESS,AUXILIARY
33	0201-770	1	CAP,W/CHAIN
34	0201-771	1	HARNESS,ELEC,AUX,RC100/85/60
35	0285-003	1	CAP,HARNESS (OPTIONAL)
36	0310-830	1	BASE, CLAMP, TWP-T2
37	0201-052	1	BASE,CLAMP
38	0304-496	1	PAD,SKID

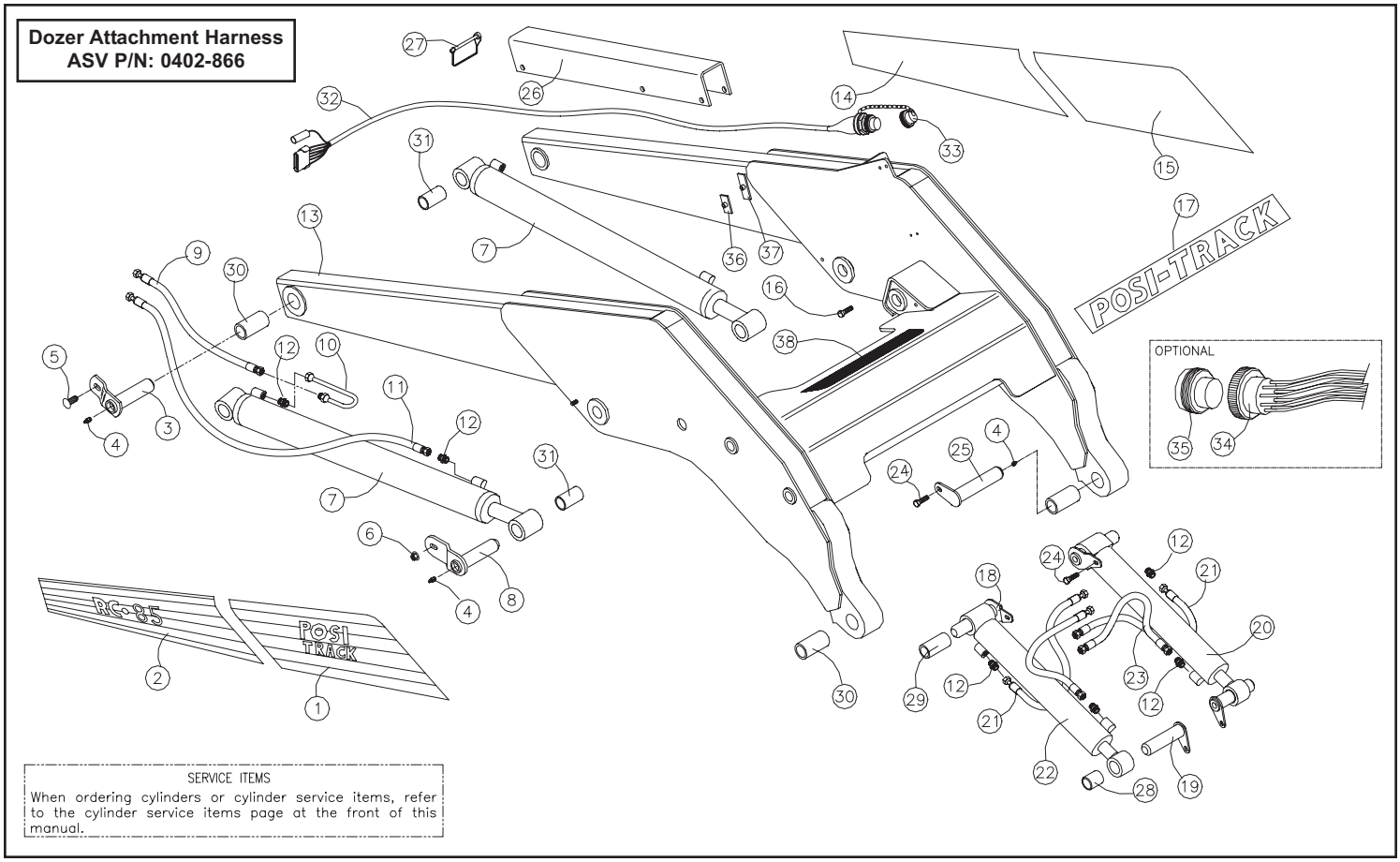

LIFT ARM TUBES AND FITTINGS (Serial #: RSF 00101-Current)

REF. NO.	PART NUMBER	QTY.	DESCRIPTION
1	0201-114	1	TUBE,BUCKET,LOWER,LOADER
2	0201-113	1	TUBE,BUCKET,UPPER,LOADER
3	0201-112	1	TUBE,ATTACH,QUICK,LOWER
4	0201-111	1	TUBE,ATTACH,QUICK,UPPER
5	0201-106	1	TUBE,DRAIN,CASE,QD
6	0310-583	5	CLAMP,SET,T2050-PP
7	0310-831	4	CLAMP, SET, T2062-PP
8	0310-584	9	PLATE,COVER TCP-T2
9	8102-134	9	CAPSCREW,HH,5/16-18UNCx1.25GD8
10	0201-110	1	TUBE,LOW,LOWER,QD
11	0201-109	1	TUBE,LOW,UPPER,QD
12	0201-107	1	TUBE,HIGH,UPPER,QD
13	0201-108	1	TUBE,HIGH,LOWER,QD
14	0201-226	1	CLAMP,SET,T4100-PP
15	0201-227	1	CLAMP,COVER,TCP-T4
16	8102-137	1	CAPSCREW,HH,5/16-18UNCx2.0 GD8
17	8102-142	4	CAPSCREW,HH,5/16-18x3.25,GD8
18	0310-345	1	ADAPTER,8MFFOR--8MB
19	0310-312	2	ADAPTER,16MFFOR-16MB
20	0310-318	2	ADAPTER,10MFFOR-10MB
21	0201-061	1	MANIFOLD,QD
22	0310-078	1	COUPLER,QUICK,FF,FEMALE,3/4-16
23	0314-143	1	COUPLER,QUICK,FF,MALE,1-1/16-1
24	0402-887	1	KIT,DUST,COVERS,RC100/85
25	0314-142	1	COUPLER,QUICK,FF,FEMALE,1-1/16
26	0201-601	2	ADAPTER,O-RING,HEX NIPPLE,10-1
27	0201-603	2	ADAPTER,O-RING,HEX NIPPLE,16-1
28	0201-602	1	ADAPTER,O-RING,HEX NIPPLE,8-8
29	0201-223	2	CLAMP,SET,2062-PP
30	0310-076	1	COUPLER,QUICK,FF,FEMALE,7/8-14
31	0310-077	1	COUPLER,QUICK,FF,MALE,7/8-14UN
32	0201-402	2	CLAMP,SET,2050-PP
33	0201-224	4	COVER,CLAMP,COP-2
34	8102-044	8	CAPSCREW,HH,1/4-20UNCx1.25,GD8
35	0201-838	1	SPOOL,VALVE,QD BLOCK
36	0201-977	1	PLUG HEX HOLLOW #2 SAE BUNA-N

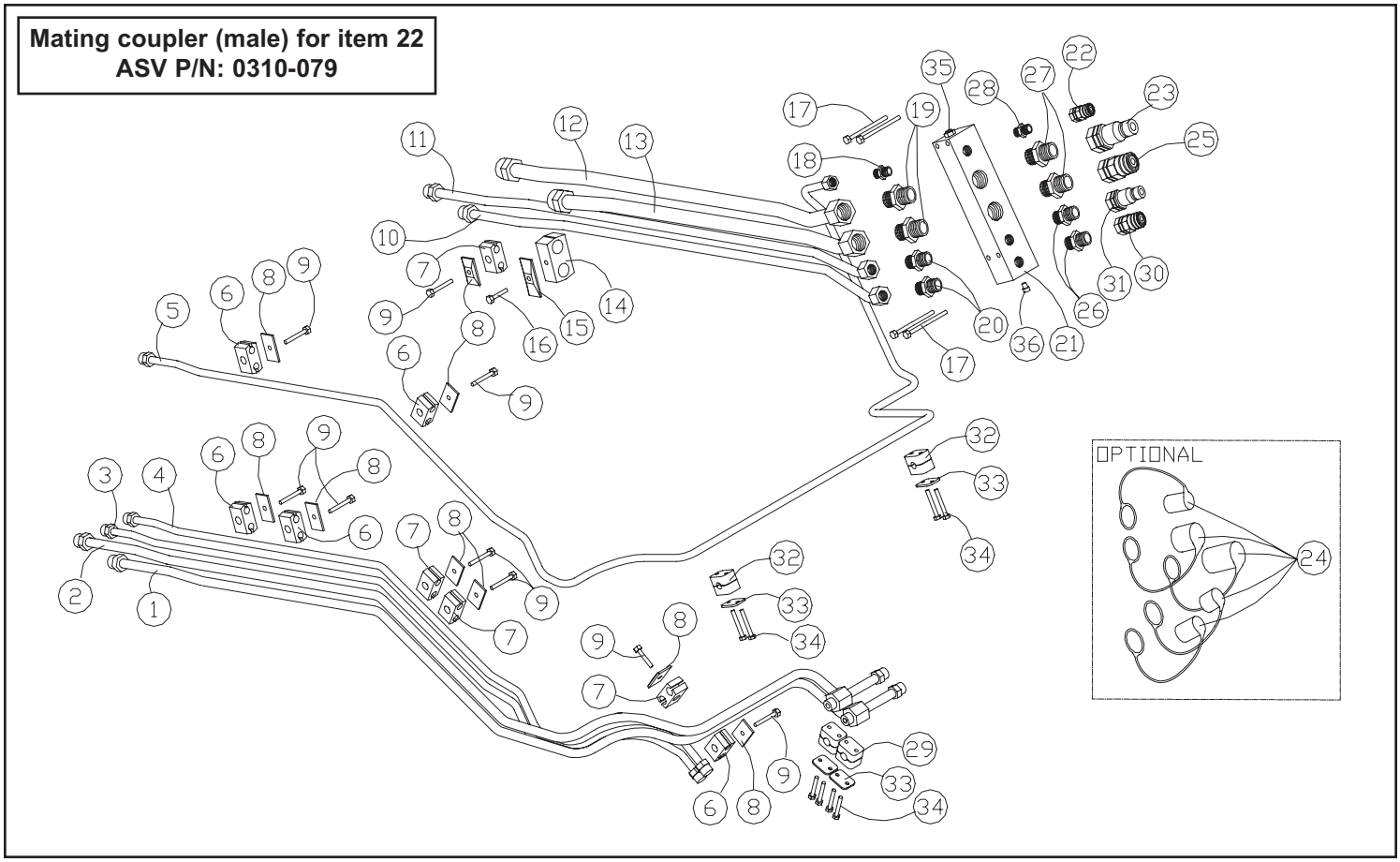

QUICK ATTACH ASSEMBLY (Serial #: RSF 00101-829)

REF. NO.	PART NUMBER	QTY.	DESCRIPTION
1	0201-722	1	HANDLE,QA,LH
2	0201-723	1	HANDLE,QA,RH
3	0304-799	2	CAPSCREW,HH,1/2-13UNCx3.75,GD8
4	0400-617	2	BLOCK,LATCH
5	0400-620	1	WLMT,PIN,LATCH,LH
6	0400-621	2	SPOOL,PIVOT
7	0400-634	4	SLIDE,PLASTIC,QUICK-ATTACH
8	0400-651	2	SPRING,COMPRESSION
9	0400-653	2	CAPSCREW,SHOULDER,.5 x.63x3/8-
10	0400-676	1	WLMT,PIN,LATCH,RH
11	2015-016	1	WLMT,QUICK ATTACH,RC85
12	2015-018	2	WASHER,FENDER,1.75x0.53x0.125
13	8040-606	2	NUT,HEX,NYLOCK,1/2-13 UNC,ZN
14	8050-347	8	WASHER,WROUGHT,1/2,STD,ZN
15	8051-620	6	WASHER,SPRING LOCK,1.0,ZN
16	8102-418	2	CAPSCREW,HH,1/2-13UNCx 6.0,GD8

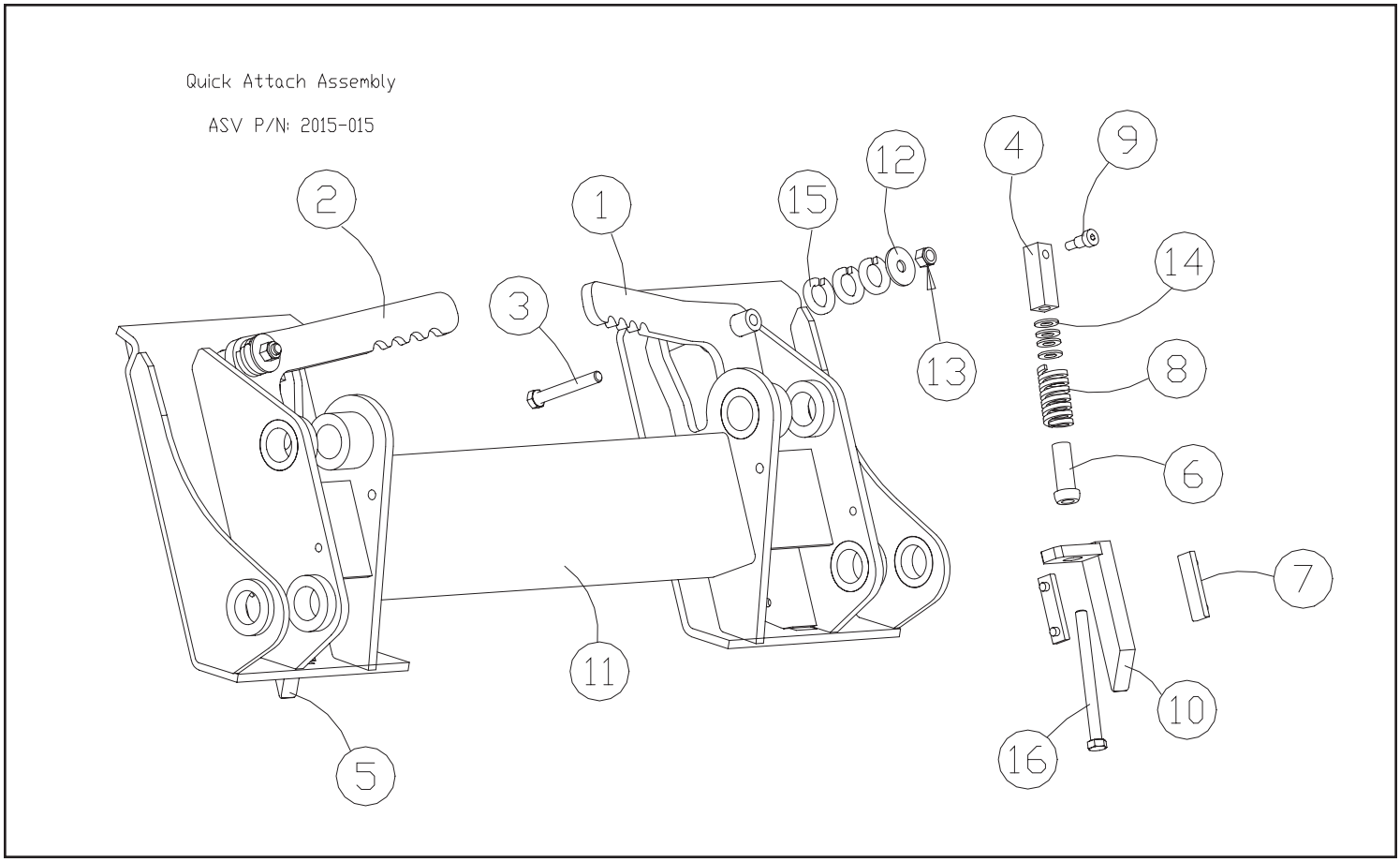

QUICK ATTACH ASSEMBLY (Serial #: RSF 00830-Current)

REF. NO.	PART NUMBER	QTY.	DESCRIPTION
1	2045-359	1	WLMT,QUICK-ATTACH,MANUAL
2	2045-761	1	HANDLE,QA,LH
3	2045-762	1	HANDLE,QA,RH
4	2045-242	1	WLMT PIN RH
5	2045-243	1	WLMT PIN LH
6	2045-245	2	BLOCK LATCH
7	8102-418	2	CAPSCREW,HH,1/2-13UNCx 6.0,GD8
8	0090-002	2	BOLT,SHOULDER,5/8"x.625" GD 8
9	8050-347	8	WASHER,WROUGHT,1/2,STD,ZN
10	2015-018	2	WASHER,FENDER,1.75x0.53x0.125
11	8051-620	6	WASHER,SPRING LOCK,1.0,ZN
12	0400-621	2	SPOOL,PIVOT
13	0304-799	2	CAPSCREW,HH,1/2-13UNCx3.75,GD8
14	8040-606	2	NUT,HEX,NYLOCK,1/2-13 UNC,ZN
15	0400-651	2	SPRING,COMPRESSION
16	0300-607	2	ZERK,GREASE,1/4-28

REF. NO.	PART NUMBER	QTY.	DESCRIPTION

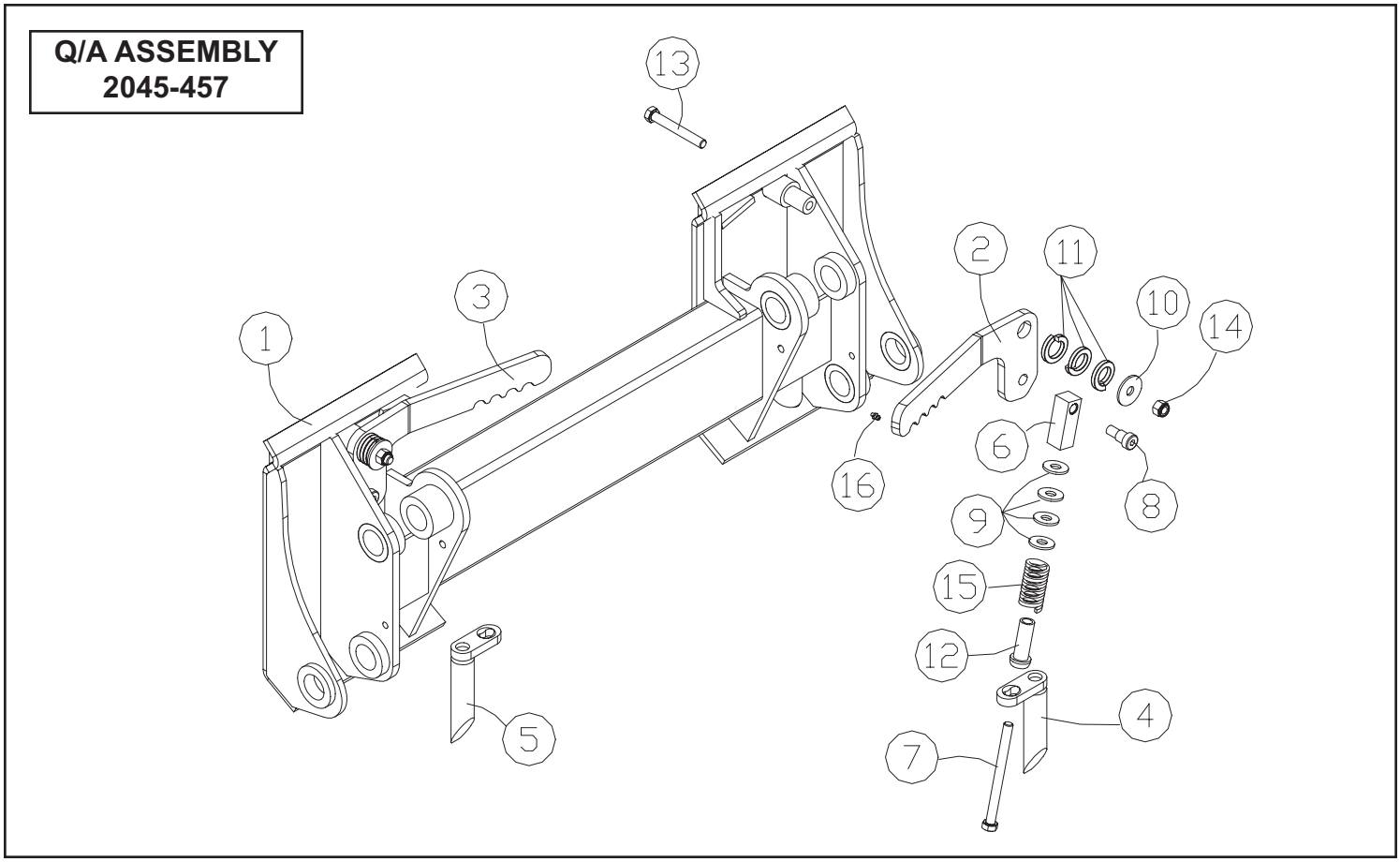

AIR CONDITIONING ASSEMBLIES (OPTIONAL) (Serial #: RSF 00101-Current)

REF. NO.	PART NUMBER	QTY.	DESCRIPTION
1	0201-244	1	BRKT,MNT,AC
2	0201-855	3	CAPSCREW,FLHD,HEX,10M-1.5x20MM
3	0201-798	1	BRKT,TENSIONER,AC,FORMED
4	0201-797	1	BRKT,TENSIONER,AC
5	0201-800	1	WLMT,MNT,TENSIONER
6	8102-230	1	CAPSCREW,HH 3/8-16UNCx2.75 GD8
7	8050-262	3	WASHER,WROUGHT,5/16,STD,ZN
8	0314-269	3	NUT,FLANGE,TOPLK,3/8-16UNC,GDG
9	0307-584	2	ADAPTER,HOSE,HEATER,8MP-10 HOS
10	0782-038	1	COMPRESSOR,AC,RC
11	0201-644	1	BELT,V, A SERIES, 1/2x61.00
12	8102-225	2	CAPSCREW,HH,3/8-16 UNCx1.5,GD8
13	8050-277	1	WASHER,WROUGHT,3/8,SAE,ZN
14	0201-815	1	CAPSCREW,HH,M10x1.5x130MM,GR10
15	8102-139	1	CAPSCREW,HH5/16-18UNCx2.50 GD8
16	8051-242	1	WASHER,SPRING LOCK,5/16,ZN
17	8050-222	1	WASHER,WROUGHT,1/4,STD,ZN
18	0201-573	1	SPACER,TUBE,.75x.5x1
19	0782-019	1	DRYER
20	0201-628	1	SPACER,CLAMP
21	0782-043	1	HOSE,A/C,#6,78.00"
22	0782-046	1	HOSE,A/C,#6,85.00"
23	0782-047	1	HOSE,A/C,#8,75.00"
24	0782-040	1	HOSE,A/C,#10,71.00"
25	0782-074	1	VALVE,CONTROL,COOLANT
26	0782-077	1	ASSY,COIL
27	0782-068	1	THERMOSTAT,AC
28	0782-069	2	RESISTOR
29	0782-076	1	FOAM
30	0782-075	1	CABLE,CONTROL
31	0782-082	2	KNOB
32	0782-072	1	SWITCH,TOGGLE,AC
33	0782-031	1	SWITCH,CONTROL,FAN
34	0782-037	4	LOUVER,A/C,PERRIN
35	0782-086	2	LOUVER,ROUND,W/MTG HOLE
36	0782-079	1	ASSY,BLOWER,PLENUM,LH
37	0782-085	4	ASSY,FAN
38	0782-070	4	MNT,CONDENSER,ROOFTOP
39	0782-067	2	ASSY,BLOWER
40	0782-073	1	COVER,AC
41	0782-088	1	RELAY,CONDENSER,12V
42	0782-078	1	COIL,CONDENSER
43	0201-730	1	COVER,PEDESTAL,LH,AC,HEATER
44	0201-729	1	COVER,PEDESTAL,RH,AC,HEATER
45	0782-045	1	HOSE,HEATER,5/8"ID,71.50"
46	0782-044	1	HOSE,HEATER,5/8"ID,68.50"
47	0314-512	1	NUT,FLANGE,TOPLOCK,M10X1.50
48	0782-066	1	VALVE,EXPANSION,905
49	0782-092	1	DUCT,A/C,LH
50	0782-091	1	DUCT,A/C,RH
51	0782-090	1	BASE,HOUSING
52	0782-093	1	ASSY,BLOWER,PLENUM,RH
53	0782-028	1	SWITCH,BINARY

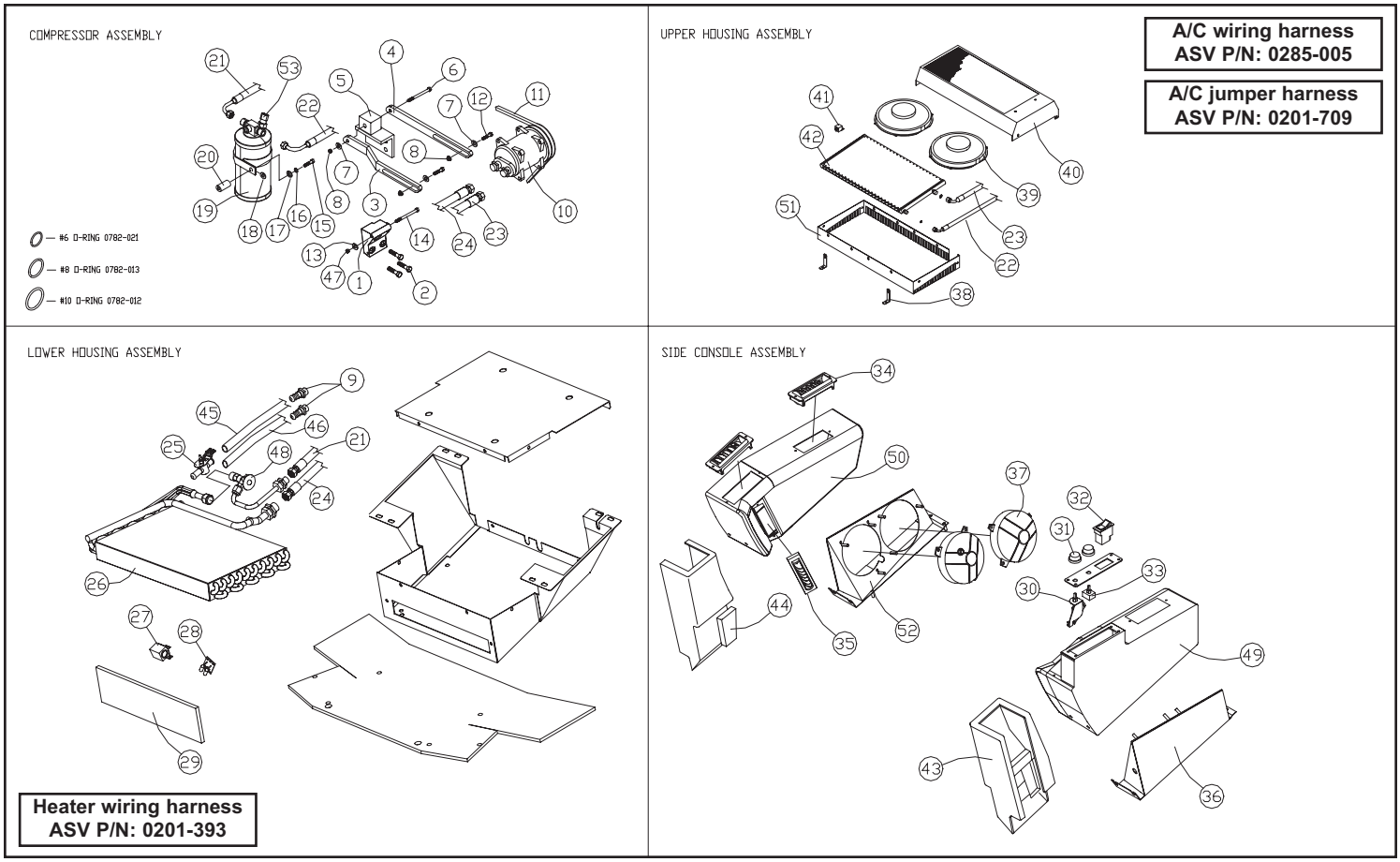

Terex Construction Americas
8800 Rostin Road
Southaven, MS 38671
(888)-201-6008
(662)-393-1800
www.terex.com